Operating Instructions

Welding Fumes Filter

SRF Maxi



SRF Maxi

SRF MAXI

Imprint

Product identification

Welding Fumes Filter	Article number
SRF Maxi	1800030

Manufacturer

Stürmer Maschinen GmbH
Dr.-Robert-Pfleger-Str. 26
D-96103 Hallstadt

Fax: 0049 (0) 951 - 96555-55

E-Mail: info@schweisskraft.de
Internet: www.schweisskraft.de

Indications regarding the operating instructions

Original instructions

Edition: 17.11.2022

Language: English

Autor SN

Indications regarding the copyright
Copyright © 2022 Stürmer Maschinen GmbH, Hallstadt, Germany.

Subject to technical modifications and error.

List of Contents

1 GENERAL REMARKS 1
1.1 Introduction 1
1.2 Notes on Copyrights 1
1.3 Information for the End-user 2

2 SAFETY 3
2.1 General Remarks 3
2.2 Notes on Signs and Symbols 3
2.3 Markings and Signs to be affixed by the End-user 4
2.4 Safety Instructions for Operators 4
2.5 Safety Instructions for Maintenance and Fault Clearance on the SRF Maxi 5
2.6 Notes on special types of hazard 5

3 PRODUCT DESCRIPTION 6
3.1 Specified Conditions of Use 8
3.2 Reasonably foreseeable misuse 9
3.3 Markings and Signs on the SRF Maxi 10
3.4 Residual risk 11

4 TRANSPORT AND STORAGE 12
4.1 Transport 12
4.2 Storage 12

5 ASSEMBLY 13
5.1 Unpacking and assembling the wheels 13
5.2 Assembling the Exhaust Arm 14

6 USE 15
6.1 Qualification of operators 15
6.2 Operator's Controls 16
6.3 Positioning the exhaust hood 19

6.4 Initial Operation 19

7 MAINTENANCE 20
7.1 Care of the Device 21
7.2 Servicing 22
7.3 Changing Filters 23
7.4 Fault clearance 26

8 DISPOSAL 27
8.1 Plastics 27
8.2 Metals 27
8.3 Final Decommissioning 28
8.4 Technical Data 29
8.5 Spare parts and accessories 30
8.6 Dimension drawing of the filter unit 31
8.7 Wiring diagrams 32
8.8 EC Declaration of Conformity in accordance with Annex II 1 A of the EC Machinery Directive 2006/42/EC 42

1 General Remarks

1.1 Introduction

These operating instructions are an essential aid for the correct and safe operation of the SCHWEISSKRAFT SRF Maxi welding fume filter unit, hereinafter referred to as the SRF Maxi.

The operating instructions contain important information for operating the SRF Maxi safely, properly and efficiently. Following the instructions helps to avoid danger, reduce repair costs and downtime and to increase the SRF Maxi's reliability and service life. The operating instructions must always be available and should be read and applied by every person who is charged with working on or with the SRF Maxi.

These jobs include, among other things:

- operating and fault clearance in everyday use
- maintenance (care, servicing, repair)
- transport
- assembly.

1.2 Notes on Copyrights

These operating instructions should be kept confidential. They should be made accessible only to authorized persons. They may be passed on to third parties only with the written consent of STUERMER MASCHINEN GmbH.

All documents are protected under the Copyright Act. The reproduction and distribution of documents, including excerpts, as well as re-using and passing on their contents is not permitted unless this is expressly permitted in writing.

Violations are liable to prosecution and liable for damages. All rights to the exercise of intellectual property are reserved for STUERMER MASCHINEN GmbH.

1.3 Information for the End-user

The operating instructions are an essential part of the SRF Maxi.
The end-user shall ensure that operators take note of these instructions.

Based on national regulations for accident prevention and environmental protection, the operating instructions are to be supplemented by the end-user's own operating instructions, including information on regulatory and reporting requirements to meet specific operating requirements, such as work organization, workflow and staff employed. Apart from the operating instructions, as well as the regulations applicable in the country and place of use concerning accident prevention, the recognized technical rules for safe and professional work must be observed.

Without the approval of STUERMER MASCHINEN GmbH, the end-user may not make any modifications, additions or conversions to the SRF Maxi that might affect safety! Spare parts used must comply with STUERMER MASCHINEN GmbH's specified technical requirements.
This is always guaranteed by using original spare parts!

Use only trained or instructed personnel for the operation, maintenance, repair and transport of the SRF Maxi. Make clear to the staff, who is responsible for the operation, maintenance, repair and transport.

2 Safety

2.1 General Remarks

The SRF Maxi has been developed and constructed in accordance with the latest state of technology and generally acknowledged safety rules. When operating the SRF Maxi, hazards to the operator or damage to the SRF Maxi and other property may arise if it:

– is not operated by trained or instructed personnel
– is not used for the purpose intended and/or
– is not properly maintained.

2.2 Notes on Signs and Symbols



DANGER

This is a warning of an imminent danger situation with an inevitable consequence of severe injury or death if the specified instruction is not followed exactly.



WARNING

Draws attention to a potentially dangerous situation that could result in severe personal injury or death if the specified instruction is not followed exactly.



CAUTION

This is a warning of a potentially dangerous situation with the result of moderate or minor injuries and property damage if the specified instruction is not followed exactly.



NOTE

This is an indication of useful information for safe and proper handling.

- The bullet point marks work and/or operating steps in a sequence. The steps are to be carried out in this order from top to bottom.

– The dash marks lists.

Art.-Nr.: 18000 30
Technical changes and errors excepted.

2.3 Markings and Signs to be affixed by the End-user

The end-user may be obliged to affix further labelling and signs on the SRF Maxi and in the vicinity.

Such markings and signs might be related, for example, to the requirement to wear personal protective equipment.

2.4 Safety Instructions for Operators

The SRF Maxi may only be operated in technically flawless condition bearing in mind its intended use, safety regulations and hazards, and in compliance with the operating instructions! Faults – in particular those which affect safety – must be corrected immediately!

Every person who is charged with the commissioning, operation or maintenance must have completely read and understood these operating instructions, in particular Section 2, Safety. Once they are working on the machine, it is too late. This applies particularly to staff who work only occasionally on the SRF Maxi.

The operating instructions must be readily accessible in the vicinity of the SRF Maxi at all times.

We accept no liability for any damages or injuries caused by failure to observe these operating instructions.

The relevant accident prevention regulations and other generally recognized safety and health rules and regulations are to be complied with.

Lay down and adhere to the responsibility for the different activities in matters of servicing and maintenance. This is the only way to avoid incorrect actions - especially in dangerous situations.

The end-user is to oblige operating and maintenance staff to wear personal protective equipment. These include in particular safety shoes, safety glasses and gloves.

Do not wear long hair loose, loose clothing or jewellery! Generally speaking there is always the danger of it getting caught somewhere, or of getting caught up and dragged into moving parts!

If safety-relevant changes to the SRF Maxi should occur, shut the extraction down immediately and switch off and report what has happened to the competent authority or person!

Work on the SRF Maxi may only be carried out by reliable, trained personnel. Observe the minimum legal age!

Only allow staff who are being trained, given practical training or instruction to work on the SRF Maxi under the constant supervision of an experienced staff member!

2.5 Safety Instructions for Maintenance and Fault Clearance on the SRF Maxi

Setting up, maintenance and repair work and fault clearance must be performed only when the device is switched off.

Always tighten bolt connections that have been loosened during repair work! If specified, tighten the relevant bolts with a torque wrench.

In particular, clean dirt and cleaning products off connections and threaded couplings before beginning maintenance, repair & care work.

Comply with the intervals prescribed or specified in the operating instructions relating to periodic inspection.

Before dismantling, parts that belong together must be marked as such!

2.6 Notes on special types of hazard

Electrical system

Work on electric equipment belonging to the filter unit may only be carried out by a qualified electrician or by trained staff under the direction and supervision of a qualified electrician in line with the regulations on electro-technical installations!

Before opening the device, disconnect the mains plug and thus secure it against unintentional restart.

In case of malfunctioning of the electrical power supply to the filter unit, immediately switch off the filter unit at the On/Off button and disconnect the mains plug!

Use only original fuses with the prescribed amperage!

Electrical components on which inspection, maintenance and repair work is being carried out must be switched off. Secure operating tools which were used for disconnection purposes against accidental or automatic reconnection. First test enabled, electrical components for absence of voltage, then isolate nearby live components. When carrying out repairs, ensure that structural features are not altered in a manner that affects operational safety.

Check cables regularly for damage and replace if necessary.

Noise

The A-weighted equivalent sound pressure level of the filter unit is LpA ≤ 72 dB(A). Combined with other machines and/or as a result of local conditions, a higher sound pressure level may be caused at the filter unit's site of installation. In this case, the end-user is obliged to provide operators with the appropriate protective equipment.

3 Product Description

The SRF Maxi is a compact welding fume filter device, which extracts welding fumes right at the point where they are produced and exhausts them with a separation rate of more than 99%. For this purpose the device is equipped with a flexible exhaust arm whose exhaust hood is easily movable and which then retains the position without any additional support. The extracted air is purified in a two-stage filtering process and then fed back into the working area.

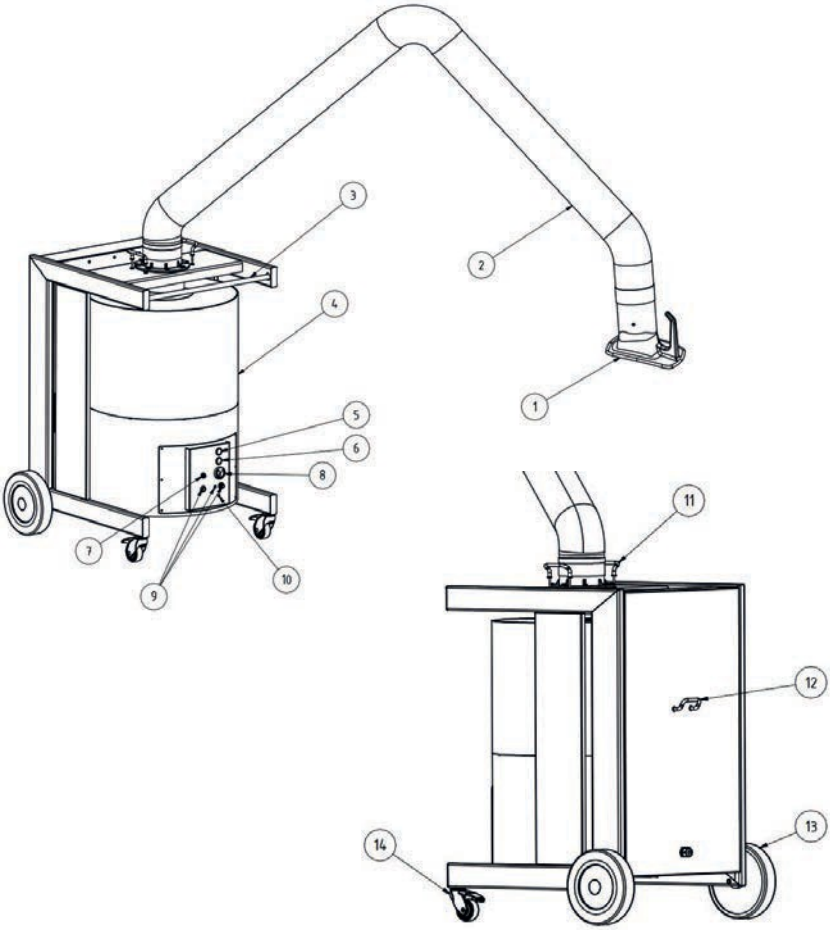

Figure 1, Product description

No.	Designation	No.	Designation
1	Exhaust hood	8	Adjustment control for switch-off delay time in start-stop mode
2	Exhaust arm/support frame	9	Ports for service staff
3	Handle bar	10	Signal horn
4	Filter element	11	Filter change system
5	On/Off button with power indicator lamp	12	Cable bracket
6	Control lamp	13	Rear wheel
7	Connection socket for start-stop sensor	14	Swivel castor with brake

3.1 Specified Conditions of Use

The SRF Maxi is designed to exhaust welding fumes arising during electrowelding right at their source and filter them out. Basically, the device can be used for all work processes where welding fumes are released. However, you should make sure that no "shower of sparks" (eg: from any grinding process) is sucked into the filter device. Welding fumes released during the work process are captured by the suction hood. Along with the exhaust air, they flow into the filter unit. Here they are passed through the filter element where fine, respirable smoke particles are separated with an efficiency of more than 99%. The cleaned air is sucked in by the fan and is returned to the work area.

In the case of extracting welding fumes containing carcinogenic levels such as are created when welding alloy steels (eg: stainless steel), according to official regulations, only devices tested and approved for the so-called recirculated air method may be used. This filter unit is approved for extracting welding fumes emitted during welding of low and high alloy steels and complies with the requirements for welding fume separation class W3, according to DIN EN ISO 15012-1.
When extracting welding fumes with carcinogenic constituents (eg: chromates, nickel oxides, etc.) the requirements of Technical Rule 560 (Technical Regulations regarding Hazardous Substances) Technical Rule 528 (Welding Work) are to be complied with.

You will find the dimensions and further details on the SRF Maxi which must be observed in the Section on Technical Data.

NOTE

Observe the information in Section 8.4 on Technical Data. It is essential to observe these specifications. Specified Conditions of Use also include complying with the notes

- on safety
- on operation and control
- on maintenance and servicing

described in this manual.

Any other or further use is considered to be improper use. Responsibility for any resulting damage rests solely with the end-user of the SRF Maxi. This also applies to unauthorized modifications to the SRF Maxi.

3.2 Reasonably foreseeable misuse

Use of the SRF Maxi in industrial areas where EX-protection requirements need to be met is not permitted. Furthermore, the operation is prohibited for:

– processes that are not in the intended use list
and in which the extracted air:

- is mixed with aerosol and oily vapours
from liquids and the resulting contamination of the air stream;
- is mixed with flammable, combustible dusts and/or substances which may form explosive mixtures or atmospheres;
- is mixed with other aggressive or abrasive dust which could damage the SRF Maxi and the filter elements employed;
- is mixed with organic, toxic substances, or a proportion of substances, which are released when cutting the material.

- **Waste** such as filter elements and separated particles can contain harmful substances.
They are not permitted be disposed of in municipal solid waste landfill - they must be disposed of in an environmentally acceptable manner;
- **Filter elements -** Third-party filters from other manufacturers that are not approved as a replacement part by STUERMER MASCHINEN GmbH may not be used because of the unknown effects on the filtering process;
- Outdoor **locations** where the filter device is exposed to the weather - the filter device may only be installed in closed buildings;
- **Hoisting machines**, such as forklifts, manual lifting trolleys that are unsuitable for transporting the filter device, observe the max. load capacity when choosing the type.

With the SRF Maxi, if the intended use is complied with, it is not possible that any reasonably foreseeable misuse might arise which could lead to dangerous situations involving personal injury.

3.3 Markings and Signs on the SRF Maxi

Plate	Meaning[1]	Place of installation	Hint
Rating plate	With technical data - STUERMER MASCHINEN GmbH Dr.-Robert-Pfleger- Straße 26 DE-96103 Hallstadt - Type: SRF Maxi - Connecting voltage -Year of manufacture: - Machine No.: - Weight: 129kg	At the back of the device	
Sticker	Designation of the W3 class of welding smoke, acc. to EN ISO 15012-1	At the front of the device At the front of the device, on the service side	
	Warning against hazardous electric voltage	At the front of the device, on the service side	
	Designation of the correct direction of fan rotation	At the upper part of the fan unit (only visible, when the filter element is removed)	
	Closing of the filter	At the filter's side	
	With an inspection plate stating the date of successive maintenance	On the right side of the device, on the left at eye-level height	

[1] Sample parameters on a rating plate.

3.4 Residual risk

Even when all safety rules are observed, during the operation of the SRF Maxi there remains a residual risk as described below.

All persons working on and with the SRF Maxi must know what this residual risk is and follow the instructions that prevent these residual risks leading to accidents or damage.

During set-up and preparation work, it may be necessary to dismantle on-site facilities. This creates different residual risks and potential hazards that the operator must be aware might arise.



WARNING

Serious injury to the lungs and the respiratory tract is possible - wear breathing protection, e.g.: a protective dust filter mask belonging to Class FFP2 as per EN 149.

Skin contact with welding fumes, etc. can cause skin irritation in sensitive individuals - wear protective clothing.

Before starting welding work, ensure that the exhaust arm and the exhaust hood are positioned correctly, the filter element is in undamaged condition, and the device is running!

When changing the filter element there may be skin contact with the separated dust and also some of the dust may be stirred up by the work. Therefore, wear breathing protection and protective clothing.

Embers in the filter element can lead to a smouldering fire and the release of harmful/toxic fumes - switch off the filter unit, close the damper in the exhaust hood and let the device cool down in a controlled manner. If necessary take measures to extinguish the fire, secure the danger area and inform the competent person immediately.

Due to leaks at the filter element, dust may leak out into the environment; rectify leaks immediately and clean the contaminated area; wear respiratory protection and protective clothing.

4 Transport and Storage

4.1 Transport



DANGER

Life-threatening crushing possible during loading and transport of the SRF Maxi!

Improper lifting and transporting may cause the pallet carrying the filter device to tilt and fall!

- **Never remain in the area under suspended loads!**

A pallet truck or forklift is best suited for transporting the pallet with the filter device.



NOTE

- Avoid shocks when placing the components of the filter device on the ground.
- Observe the maximum load capacity of the industrial truck.

4.2 Storage

The SRF Maxi should be stored in its original packaging at an ambient temperature of -20°C to +55°C in a dry and clean place. The packaging must not be weighed down by other items.

5 Assembly

WARNING

Serious injury can be caused when mounting the exhaust arm as a result of the pretensioning of the coil springs employed. In the event of improper handling, the support frame may move unexpectedly and cause severe facial injuries or crush fingers!

NOTE

The end-user of the SRF Maxi may only entrust the assembly of the SRF Maxi on their own to persons who are familiar with the task.

Three people are needed to assemble the device.

It is important to ensure that the welding current return wire between the workpiece and the welding machine has a low resistance and connections between the workpiece and the filter unit are avoided, so that if necessary, the welding current cannot flow back through the protective conductor of the filter device to the welding machine.

5.1 Unpacking and assembling the wheels

- Take the set of wheels out from packing (of putting on type)
- Now lift the large packaging.
- The SRF Maxi device stands on the cardboard box bottom and is bolted to the pallet by means of two metal brackets. Cut the corners of the cardboard box bottom with a knife to be able to fold the sides. To ensure complete removal of the transport fixtures, loosen the bolts of the metal brackets and remove the two bigger screws.
- The set of wheels contains all wheels, including all minor components required for installation and a separate pictorial manual for installation of the wheels.
- Follow this manual when performing the installation.
- Check the filter element is in the correct position and in undamaged condition.
- Now, by means of the two handles, press the filter change system downwards as far as the end stop (Fig. 2, No. 11).

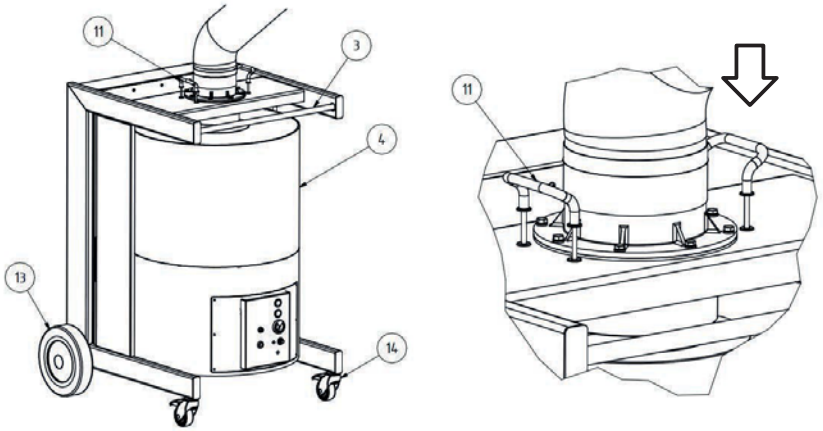

Figure 2, Unpacking and assembling the wheels

No.	Designation
3	Handle bar
4	Filter element
11	Filter change system
13	Rear wheel
14	Swivel castor with brake (front wheel)

5.2 Assembling the Exhaust Arm

The exhaust arm consists of three main components: slew ring, support frame and extraction hood. These are individually packaged in one carton each.

There is a separate guide for installing and adjusting the exhaust arm in the box containing the support frame. Follow these instructions for mounting the exhaust arm on a mobile device.

6 Use

Every person who is concerned with the operation, maintenance or repair of the SRF Maxi must have completely read and understood these operating instructions.

6.1 Qualification of operators

The end-user of the SRF Maxi may only entrust the independent use of the device to persons who are familiar with the task.

Being familiar with this task includes the fact that the persons concerned have been instructed according to the task to be performed and understand the operating instructions and the relevant works' operating instructions.

Only permit use of the SRF Maxi by trained or instructed staff. This is the only way to achieve awareness among all employees concerning safety and hazards at work.

6.2 Operator's Controls

The controls and connection options are located on the front of the SRF Maxi:

- **On/Off button (No. 1)**

  This is the switch to turn the device on and off.
  The green illuminated ring around the switch shows the unit is running properly or operational readiness if a stop-start sensor is being used.
  If a fault or an error occurs, the green light goes off.
  The unit switches off automatically.

- **Control lamp (No. 2)**

  The yellow signal light indicates a fault or an error on the device. These errors are represented for visual display in different flashing codes.

  The signal light flashes at regular intervals:

  Servicing of the equipment is due; inform the SCHWEISSKRAFT customer service.

  The signal light flashes 2x in quick succession at regular intervals:

  The motor protection relay has tripped; inform the SCHWEISSKRAFT customer service.

  The signal light flashes 3x in quick succession at regular intervals:

  Incorrect rotating field, the fan turns in the wrong direction. To remedy this, two phases must be swapped in the CEE plug by an electrician.

- **Adjustment control for switch-off delay time in start-stop mode (No. 3)**

  When connecting a start-stop sensor (optional), the switch-off delay time of extraction after completion of welding can be set from 5 to 60 seconds.

-
-
- **Service port (No. 4)**

  Connection for the SCHWEISSKRAFT service technician. This interface allows SCHWEISSKRAFT customer service to adjust settings on the device.

- **Pressure measurement port (No. 5)**

  Connection for the SCHWEISSKRAFT service technician. The SCHWEISSKRAFT service technician uses this port to measure pressure.

- **Signal horn (No. 6)**

  Guaranteed removal of welding fumes is only possible if there is sufficient extraction capacity. As the dust accumulation in the filter element increases, its resistance to through-flow increases and the suction decreases. Once it falls below a minimum value, the horn sounds and the yellow signal lamp flashes at regular intervals.
  A filter change is required.

  The same happens if the damper in the exhaust hood is closed too far and thus equally the suction is reduced by too great a degree. The remedy is to open the damper.

- **Socket for start-stop sensor (No. 7)**

  Here, as an option, a start-stop sensor can be connected.
  Using it ensures that the extraction is only in operation during the welding time (arc time) and the set delay time. The device recognizes automatically that the start-stop sensor is plugged in.

- **Pressure switch (No. 8)**

  Only to be used by the SCHWEISSKRAFT service.



NOTE

The first time the SRF Maxi is connected to the mains, a self-test is carried out during which the horn sounds briefly and the signal lamps light up briefly. This should be performed at regular intervals (weekly) by the user pulling and then re-inserting the power plug. If the horn and signal light are not activated, the SRF Maxi must be checked by the SCHWEISSKRAFT service.



Figure 3, Controls

No.	Designation
1	On/Off button with power indicator lamp
2	Control lamp
3	Adjustment control for switch-off delay time in start-stop mode
4	Service port (only for service staff)
5	Pressure measurement port (for service staff)
6	Signal horn
7	Socket for start-stop sensor
8	Pressure switch (only for service staff)

6.3 Positioning the exhausthood

The exhaust arm and the suction hood are designed so that they can be easily adjusted and pulled into position with one hand. Once adjusted, the suction hood remains in that position of its own accord. Furthermore, both the suction hood and the arm can be pivoted through 360° so that almost any position can be set. For adequate capture of welding fumes, it is important that the suction hood is always positioned correctly. You can see the correct position in the following picture.

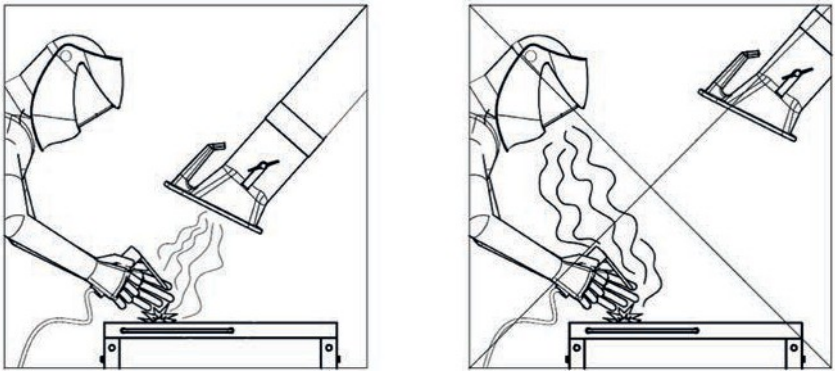

Figure 4, Positioning the exhaust hood

- Position the arm so that the exhaust hood is about 25 cm obliquely above the weld.
- The exhaust hood must be positioned so that it safely captures the welding fumes, taking into account the movement of welding fumes caused by the heat and the suction range.
- Always move the exhaust hood with respect to the weld position as you advance.

WARNING

An incorrectly positioned exhaust hood or too low an extraction performance do not ensure that hazardous substance-containing air is captured adequately by the exhaust hood. Hazardous substances can thus enter into the area where the user breathes and lead to injury to health!

6.4 Initial Operation

- Turn the unit on with the On/Off button marked "0" and "I".
- The fan starts and the green operating control lamp on the On/Off switch indicates that the device is running normally.
- Always move the exhaust hood with respect to the weld position as you advance.

7 Maintenance

The notes described in this section are meant as minimum requirements. Depending on the operating conditions, further instructions may be necessary to keep the SRF Maxi in optimal condition. The time intervals indicated refer to **single shift** operation.

The maintenance and repair work described in this section may only be carried out by the end-user's specially trained corrective maintenance staff.

- Spare parts used must comply with STUERMER MASCHINEN GmbH's specified technical requirements. This is always guaranteed by using original spare parts.

- Take steps for safe and environmentally-friendly disposal of operating fluids and of replacement parts.

- Follow the safety instructions on the following pages.

7.1 Care of the Device

Care of the SRF Maxi is essentially limited to cleaning dust and debris off all surfaces and checking the filter cartridges.



WARNING

Skin contact with cutting fumes, etc. can cause skin irritation in sensitive individuals!

Serious injury to the lungs and the respiratory tract is possible!

In order to avoid contact and inhalation of dust, use protective clothing, gloves and a powered air respirator system, e.g. a dust filter mask belonging to Class FFP2 as per EN 149.

The release of hazardous dusts during repair and maintenance is to be avoided to ensure that persons who are not involved with the task are not affected.



NOTE

Do not clean the SRF Maxi with compressed air! This may cause dust and/or dirt particles to enter the ambient air.

Proper care helps to keep the SRF Maxi functioning correctly at all times.

- Clean the SRF Maxi thoroughly once a month.
- When cleaning the suction arm, also eliminate any accumulated dust or other deposits on the protective grating (sold separately) or in the interior of the exhaust hood.
- The outer surfaces of the SRF Maxi can be cleaned with a suitable industrial vacuum cleaner for dust class H or alternatively wiped clean with a damp cloth.
- Check the hose of the exhaust arm for damage, e.g. burn holes from sparks or chafing.



Note

Major defects and leaks lead to a reduction of the extraction efficiency of the suction hood. Replace the hose with a new one in good time.

7.2 Servicing

Regular inspection and servicing have a positive effect on the reliable functioning of the SRF Maxi and should be done at least every three months.

- Visual inspection

- Except for an occasional adjustment of the joints of the exhaust arm and changing filters if necessary, the device is maintenance-free. For adjusting the joints, take note of the mounting and maintenance instructions included with the extraction arm.

NOTE

Necessary repair work must only be carried out by SCHWEISSKRAFTor by specialist companies authorized by SCHWEISSKRAFT.

WARNING

Skin contact with cutting fumes, etc. can cause skin irritation in sensitive individuals!

Repair and maintenance work on the SRF Maxi may only be carried out by trained and authorized personnel while complying with the safety rules and the applicable accident prevention regulations!

Serious injury to the lungs and the respiratory tract is possible!

In order to avoid contact with and inhalation of dust, use protective clothing, gloves and a powered air respirator such as a dust filter mask belonging to Class FFP2 as per EN 149.

The release of hazardous dusts during repair and maintenance is to be avoided to ensure that persons not involved with the task are not affected.

7.3 Changing Filters

The life of the filter cartridges depends on the type and amount of deposited particles.

Note

As the dust accumulation in the filter element increases, its resistance to through-flow increases and the suction decreases. Once it falls below a minimum level, the horn sounds and the green power indicator light goes off. Now, a change of the filter element is necessary.

If the unit switches off of its own accord and the control lamp blinks 2x in quick succession at regular intervals, it is possible that a change of intake filter is required.

Check in advance with your local waste disposal company how to dispose properly of filters contaminated with welding fumes.

WARNING

Cleaning the filter cartridges is not permitted. This leads inevitably to damage to the filter medium, which means the filter no longer functions and dangerous substances find their way into the surrounding, breathable air.

Use only original replacement filters, because only they guarantee the necessary separation rate and are matched to the filter equipment and its performance characteristics.

Skin contact with cutting fumes, etc. can cause skin irritation in sensitive individuals.

Serious injury to the lungs and the respiratory tract is possible.

In order to avoid contact with and inhalation of dust, use protective clothing, gloves and a powered air respirator or a dust filter mask belonging to Class FFP2 as per EN 149.

- Changing filters:

- Switch the SRF Maxi off with the On/Off button (Fig. 3, No. 1).
- Prevent unintentional restarting by unplugging the device.
- Simultaneously pull the handles located on the filter change system upwards until the end stop is reached (Fig. 5, No. 11).
  The system is now held in position by a magnet.
- Grasp the main filter at the sides (Fig. 5, No. 4).
  Lift it gently and pull it forwards out of the device.
- Pull off the sticker attached on the side of the filter element and use it to seal the opening at the top of the filter element.
- In doing so, make sure to stir up as little dust as possible.
- Replace the filter cartridge with a new one. Make sure that the filter element is pressed as far as the fan housing. In this case, the filter is positioned over the seal in the axial direction with the housing and the filter change unit.
- Now, by means of the two handles, press the filter change system downwards as far as the end stop (Fig. 5, No. 11).
- Plug the power cable back into the socket and turn on the device. The green power indicator light on the On/Off button should come on and show the device is running normally.

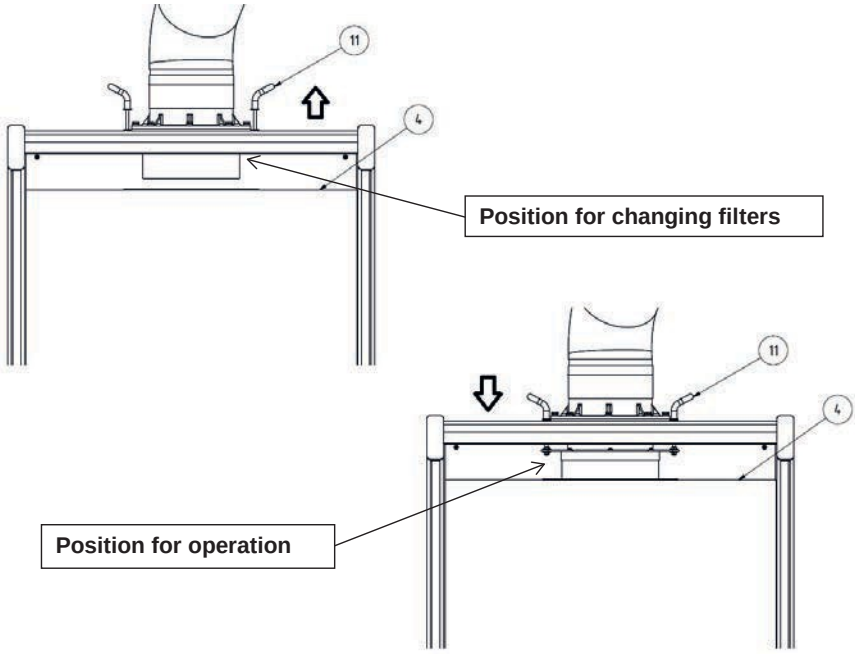

Figure 5, Changing filters

- **Changing the intake filter:**

- Have a plastic bag/rubbish bag ready.
- Switch the SRF Maxi off at the On/Off button (Fig. 3, No. 1).
- Prevent unintentional restarting by unplugging the device.
- Pull the intake filter (Fig. 6, No. 15) forwards out of the intake filter holder (Fig. 6, No. 16) and put it in the rubbish bag.
- In doing so, make sure to stir up as little dust as possible.
- Replace the filter cartridge with a new one.
- Plug the power cable back into the socket and turn on the device. The green power indicator light on the On/Off button should come on and show the device is running normally.

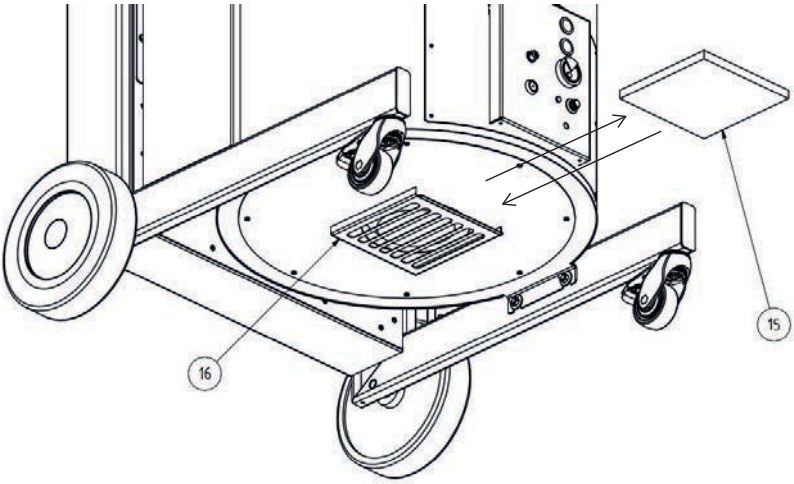

Figure 6, Changing the intake filter

7.4 Fault clearance

Malfunction	Possible Cause	Remedy
Not all smoke is sucked in.	Distance of the exhaust hood from welding position too great.	Place exhaust hood closer.
	Clean air outlet covered.	Keep clean air outlet free of obstruction.
Signal horn sounds.	Extraction power too low, damper in the suction hood is closed.	Open damper in exhaust hood to full extent.
	Filter element is saturated.	Change the filter element.
Dust comes out on the clean air side.	Filter element is damaged.	Change the filter element.
Motor protection relay (F4) trips.	Intake filter clogged (motor temperature too high)	Allow unit to cool and/or change intake filter
Device does not start up.	No mains voltage.	Have it checked by an electrician.
	Start-stop sensor connected , but current not detected (welding not yet in progress)	Start welding

8 Disposal

WARNING

Skin contact with cutting fumes, etc. can cause skin irritation in sensitive individuals!

Disassembly work on the SRF Maxi may only be carried out by trained and authorized personnel while complying with the safety rules and the applicable accident prevention regulations!

Serious injury to the lungs and the respiratory tract is possible!

In order to avoid contact with and inhalation of dust, use protective clothing, gloves and a powered air respirator or a dust filter mask belonging to Class FFP2 as per EN 149.

The release of hazardous dusts during disassembly is to be avoided to ensure that persons who are not involved with the task are not affected.

CAUTION

Comply with the legal obligations on waste prevention and correct recycling/disposal during all work on and with the SRF Maxi!

8.1 Plastics

The plastics used must be sorted by type as far as possible.
Plastics must be disposed of in compliance with the legal requirements.

8.2 Metals

Different metals must be separated and disposed of. Disposal must be carried out by an authorized company.

8.3 Final Decommissioning

All disassembly work requires maximum care, so as to prevent the liquids inside the filter from agitating, which could be hazardous for the personnel carrying out disassembly.

When preparing disassembly and utilisation of the filter, it is required to negotiate the proper method of disposing of housing elements, etc., contaminated by welding smoke, with an appropriate waste processing company, beforehand.

For that reason, the filter must be disassembled in a well-ventilated and appropriately separated/designated room with an air extraction system.

Prior to commencing disassembly, clean the device and remove the filter element. The agitated dusts still present inside the device must be removed with an industrial vacuum cleaner of class "H" filtration.

When carrying out disassembly, personnel must wear personal protection equipment, e.g. protective clothes, gloves, independent breathing equipment, etc., in order to prevent contact with hazardous dusts.

The agitated dusts must be removed with an industrial vacuum cleaner of class "H" filtration.

Clean the working station, when the SRF Maxi device has been disassembled.

8.4 Technical Data

Connection voltage	See Identification Plate
Motor output	1.5 kW
Maximum power consumption	See Identification Plate
Duty cycle	100%
Type of protection	IP 42
ISO Class	F
Permitted ambient temperature	-10 / +40°C
Fan capacity, max.	1.800 m³/h
Device capacity, max.	1.300 m³/h without extraction arm 1.100 m³/h, with extraction arm
Vacuum, max.	3.200 Pa
Filter surface area	42 m^2
Minimum extraction performance (flow monitoring trigger threshold)	750 m³/h
Exhaust arm	Nom. diam. 150mm, 2m long 3m long 4m long
Welding fume separation class as per EN ISO 15012-1	W3
Sound pressure level at 1m distance as per DIN EN ISO 3744	72 dB(A)
Width	807 mm
Depth	825 mm
Height	1.185 mm
Weight	129 kg

8.5 Spare parts and accessories

Consec. No.	Illustration	No.	Designation	Art. No.
1	1	1	Exhaust hood	79 103 00
2	1	1	Exhaust hood with LEDs and switch	79 103 040
3	1	2	Hose for exhaust arm, 2 m Hose for exhaust arm, 3 m Hose for exhaust arm, 4 m	114 0002 114 0003 114 0004
4	2	4	Filter element	109 0468
5	6	15	Intake filter	109 0472

8.6 Dimension drawing of the filter unit

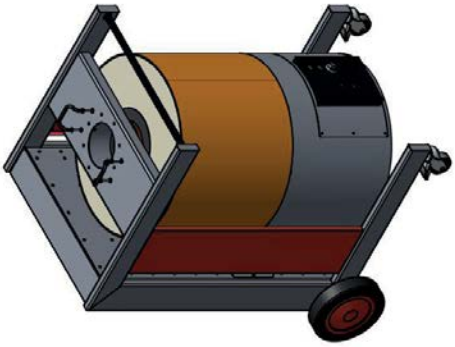

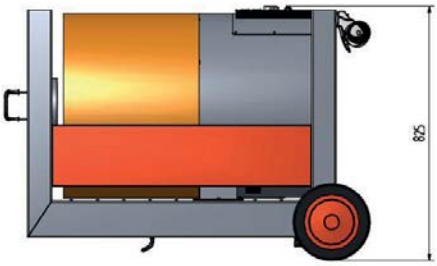

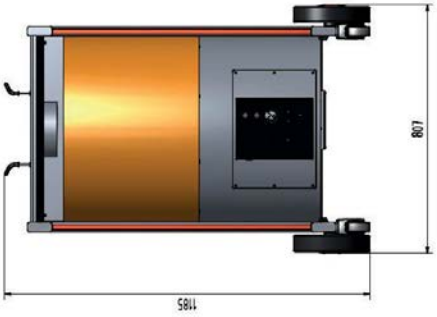

Firma/Kunde /

Company/Customer:	SRF Maxi
Anlagenbezeichnung / Project description:	Circuit
Zeichnungsnummer / Drawing number:	Diagram
Kommission / Commission:	

Hersteller (Firma) / Manufacturer (Company):	STUERMER	Schaltschränke / Cabinets:	
Projektname / Project name:		Vorabsicherung / Pre fuse protection:	16A CAT C
Fabrikat / Brand:		Einspeisung / Power supply:	
Typ / Type:		Zuleitung / Power feed cable:	
Installationsort / Installation place:		Nennstrom / Nominal current:	siehe Typenschild/ see nameplate
Projektverantwortlicher / Project responsible person:		Steuerspannung / Control Voltage:	24VDC
Teilebesonderheit / Part escpecialness:		Baujahr / Year of manufacture:	

Erstellt am/ Created on: 22.05.2017
Verändert am / Modified on: 22.05.2017

Anzahl der Seiten / Nr. of pages: 10

Inhaltsverzeichnis/ Table ofcontents:

Spalte X: eine automatisch erzeugte Seite wurde manuell nachbearbeitet/
Column X: An automatic created page was modified

F06_001_DE_EN

Seite/Page:	Seitenbeschreibung/Page description:	Seitenzusatzfeld/Additional field:	Datum/Date:	Bearbeiter/Person:	X
/1	Titel- / Deckblatt\ Coversheet				
/2	Inhaltsverzeichnis / Table of contents: /1 - /10		30.06.2015	harira	
/3	Sicherheitshinweise/Security information		30.06.2015	harira	
/4	Elektrische daten/electrical data		30.06.2015	harira	
/5	Einspeisung+Lastteil einphasen/Power supply + load circuit onephase		30.06.2015	harira	
/6	Einspeisung+Lastteil dreiphasen/Power supply + load circuit threephase		30.06.2015	harira	
/7	Steuerung/Control circuit 1		30.06.2015	harira	
/8	Steuerung/Control circuit 2		30.06.2015	harira	
/9	Steuerung/Control circuit 3		30.06.2015	harira	
/10	Artikelstückliste/ Partlist		30.06.2015	harira	
			30.06.2015	harira	

1

	Datum/Date:	30.06.2015	SRF Maxi	Inhaltsverzeichnis / Table of contents: /1 - /10	Blatt/Page: 2 Blatt/Page: 10
	Bearb./Name:				
	Gepr/Checked:				

!! Sicherheitshinweise/ Safety information !!

Die elektrische Installation darf nur von einer zugelassenen Elektrofachkraft durchgeführt werden./
The electrical installation must be carried out by an accredited electrician

Es sind die ortsüblichen Elektro-Versorgungsunternehmen (EVU)-Vorschriften sowie die gerätespezifischen VDE und TÜV Vorschriften einzuhalten.
Bei Nichteinhaltung der Vorschriften und Bedienungsanleitungen können Funktionsstörungen mit Folgeschäden und Personengefährdung entstehen.
Bei Anschluß von Geräten, Komponenten, Schaltaggregaten sowie Baugruppen mit Schutzleiter entsteht bei Falschanschluß (Vertauschen der Drähte) Lebensgefahr. Örtliche Vorschriften des EVU`s und VDE Bestimmungen beachten. Vor der Inbetriebnahme sind alle Klemmen und Schraubverbindungen zu überprüfen. Die Motorschutzschalter (relais) sind vor der Inbetriebnahme auf ihre richtigen Einstellungen zu prüfen.

The usual local power supply company (PSC) regulations, as well as device-specific electrical regulations must be observed.
In case of non-compliance with the provisions and the instruction manual it can lead to malfunctions with consequential and personal danger.
When connecting devices, components, assemblies and circuit boards with protective conductor danger
arises in case of faulty wiring. Before the operation, check all clamps and threaded connections.
The motor protection switch (relay) must be checked for their correct settings before use.

Zur Kenntnisnahme:

Der Schaltplan ist integraler Bestandteil des Schaltschranks. Es ist unbefugten Personen untersagt, Veränderungen im Schaltplan sowie in der Verdrahtung vorzunehmen. Bei Zuwiderhandlung erlischt unsere Gewährleistung. Die Zeichnungen des Schaltplanes sind urheberrechtlich geschützt. Ohne unsere schriftliche Genehmigung dürfen diese weder verändert, ergänzt, kopiert, noch Dritten zugänglich gemacht werden.

For information:

The circuit diagram is an integral part of the cabinet. It is forbidden to unauthorized persons, to changes the circuit diagram and the wiring. In case of non-compliance the warranty expires. The drawings of the circuit diagram are subject to copyright. Without our prior written agreement no data must be copied, reproduced, modified or made available to third parties.

Aderfarben/Wire colors:

Farbe/Colour:	Deutsch	English
BK	Schwarz	Black
BN	Braun	Brown
GR	Grau	Grey
GN/YE	Grün/Gelb	Green/Yellow
BU	Blau	Blue
WH	Weiss	White
RD	Rot	Red
VT	Violett	Purple
PK	Rosa	Pink
OG	Orange	Orange
TR	Transparent	Transparent
BG	Beige	Beige

VERSORGUNGSPANNUNG/ Supply voltage	MOTORLEISTUNG/ Motor power	VORABSICHERUNG/ Pre fuse Protection	ZULEITUNG/ Supply cable
1x110V / 50 Hz	1,1 kW	Leitungsschutzschalter 20 A / Kat. C Circuit breaker 20A / Cat. C	4 (5) x 2,5 mm²
1x110V / 60 Hz	1,3 kW	Leitungsschutzschalter 20 A / Kat. C Circuit breaker 20A / Cat. C	4 (5) x 2,5 mm²
1x230V / 50 Hz	1,1 kW	Leitungsschutzschalter 16 A / Kat. C Circuit breaker 16A / Cat. C	4 (5) x 1,5 mm²
1x230V / 60 Hz	1,1 kW	Leitungsschutzschalter 16 A / Kat. C Circuit breaker 16A / Cat. C	4 (5) x 1,5 mm²
3x400V / 50 Hz	1,1 kW	Leitungsschutzschalter 16 A / Kat. C Circuit breaker 16A / Cat. C	4 (5) x 1,5 mm²
3x460V / 60 Hz	1,3 kW	Leitungsschutzschalter 16 A / Kat. C Circuit breaker 16A / Cat. C	4 (5) x 1,5 mm²

3

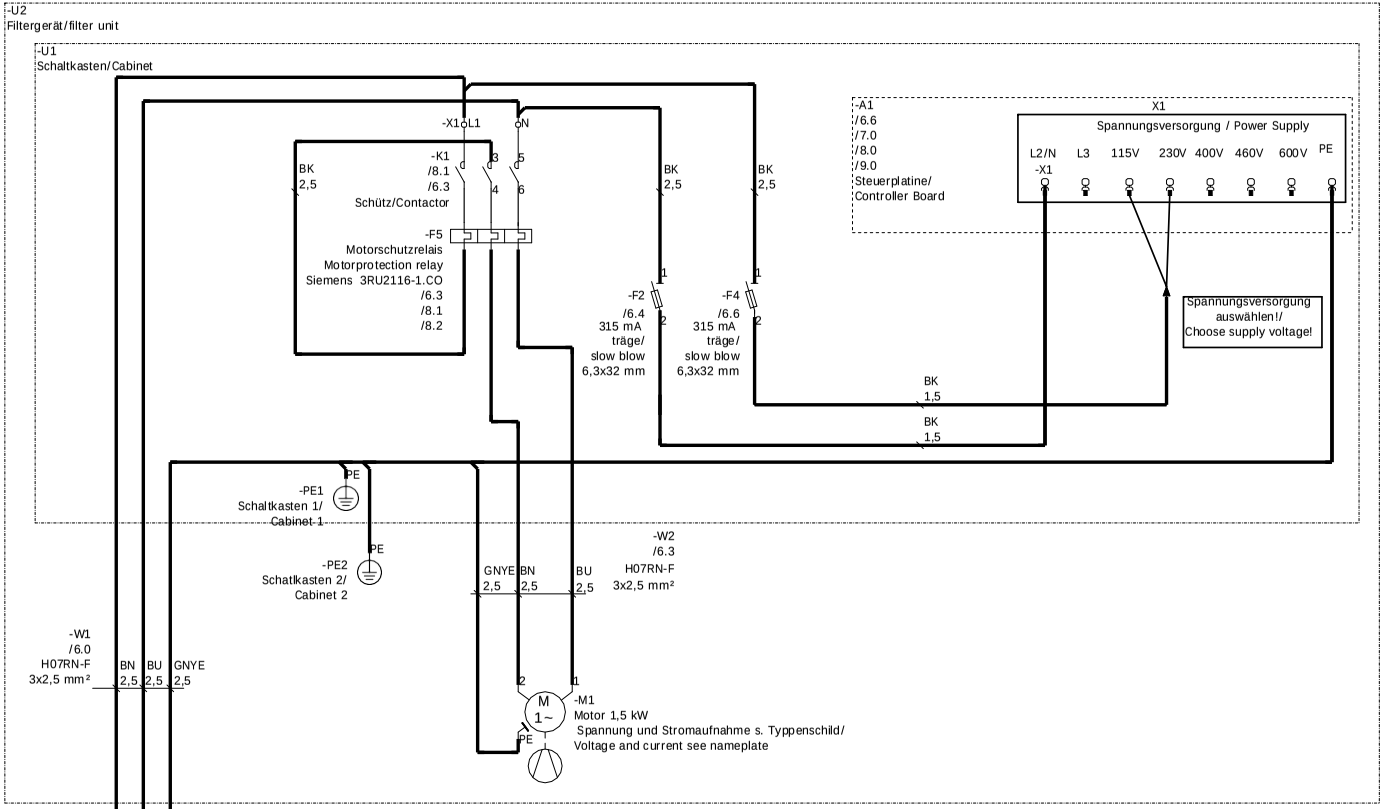

4

	Datum/Date:	30.06.2015	SRF Maxi		Einspeisung+Lastteil einphasen/Power supply + load circuit onephase		
	Bearb./Name:						Blatt/Page: 5
	Gepr/Checked:						Blatt/Page: 10

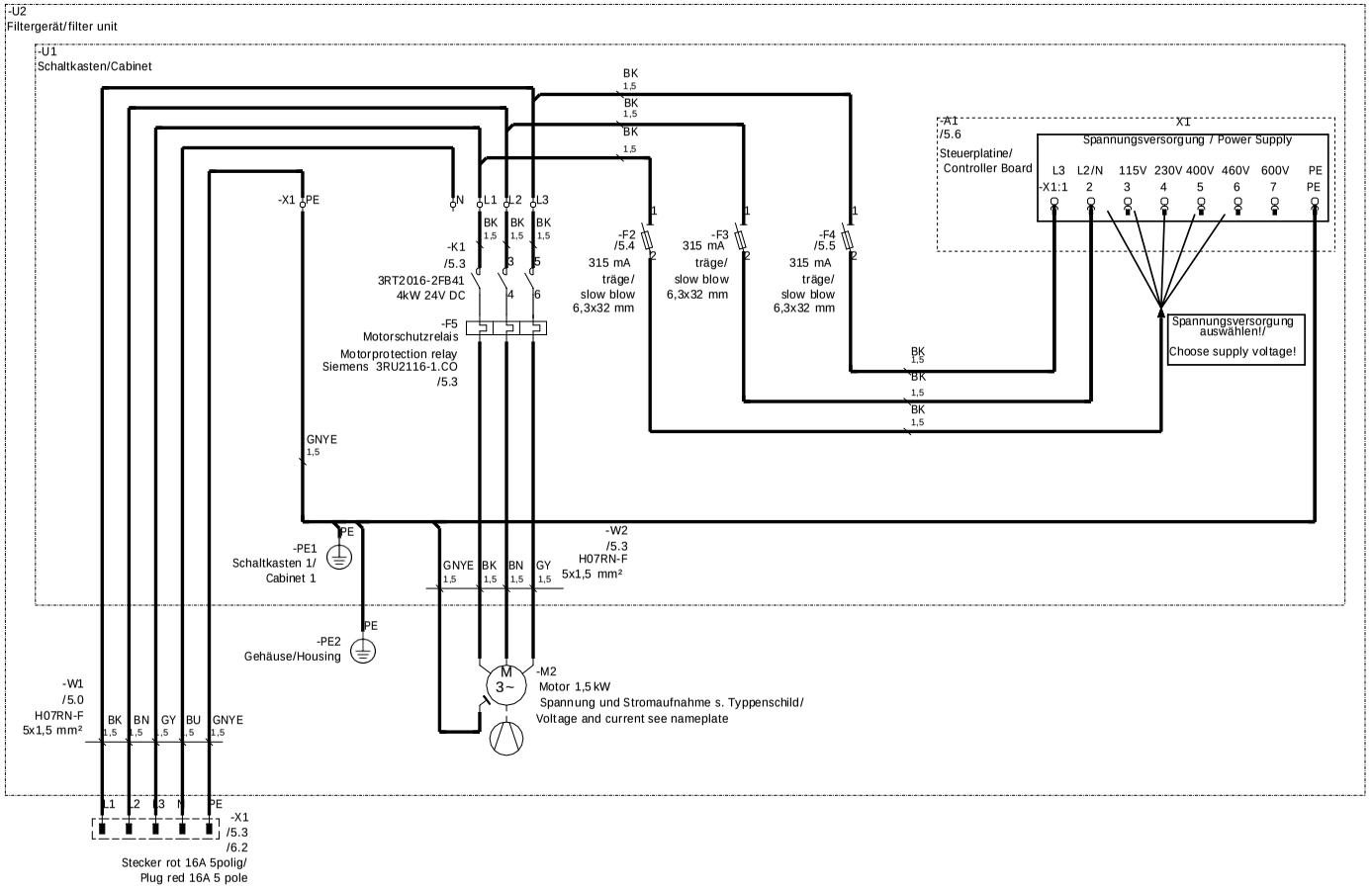

5

	Datum/Date:	30.06.2015	SRF Maxi		Einspeisung+Lastteil dreiphasen/Power supply + load circuit threephase	Blatt/Page: 6
	Bearb./Name:					Blatt/Page: 10
	Gepr/Checked:					

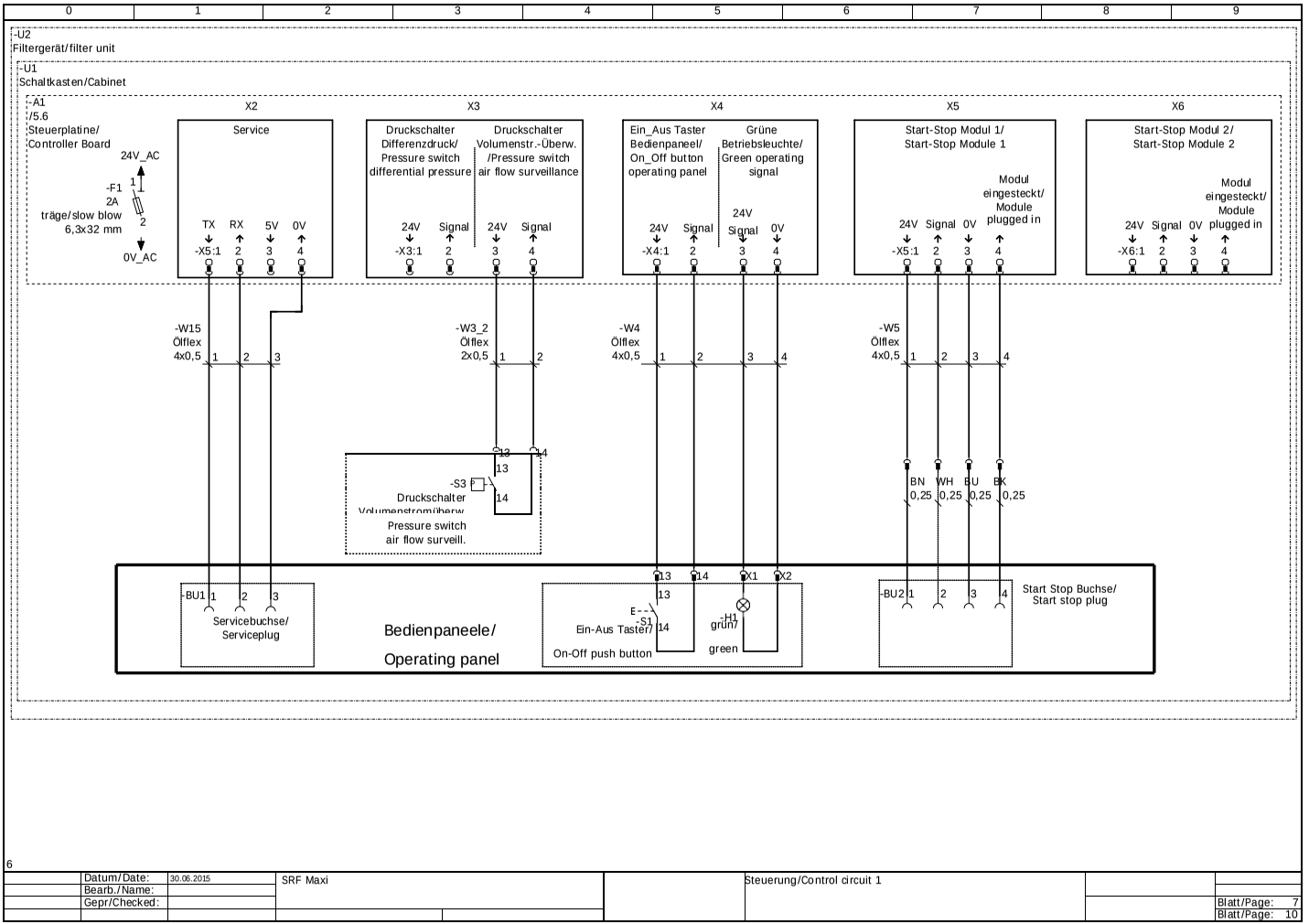

6

	Datum/Date:	30.06.2015	SRF Maxi		Steuerung/Control circuit 1		
	Bearb./Name:						
	Gepr/Checked:						Blatt/Page: 7
							Blatt/Page: 10

-U2
Filtergerät/filter unit

-U1
Schaltkasten/Cabinet

-A1
/5.6
Steuerplatine/
Controller Board

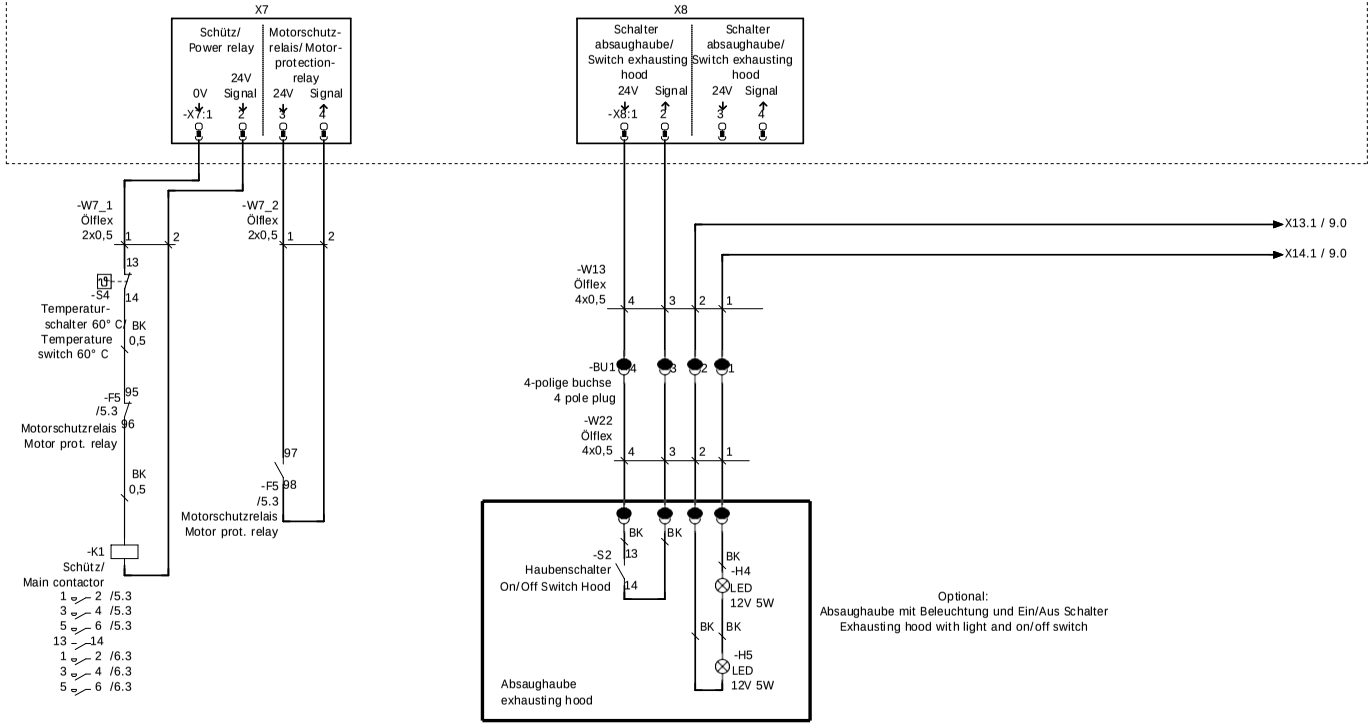

7

	Datum/Date:	30.06.2015	SRF Maxi		Steuerung/Control circuit 2		
	Bearb./Name:						
	Gepr/Checked:						Blatt/Page: 8
							Blatt/Page: 10

-U2
Filtergerät/filter unit

-U1
Schaltkasten/Cabinet

-A1
/5.6
Steuerplatine/
Controller Board

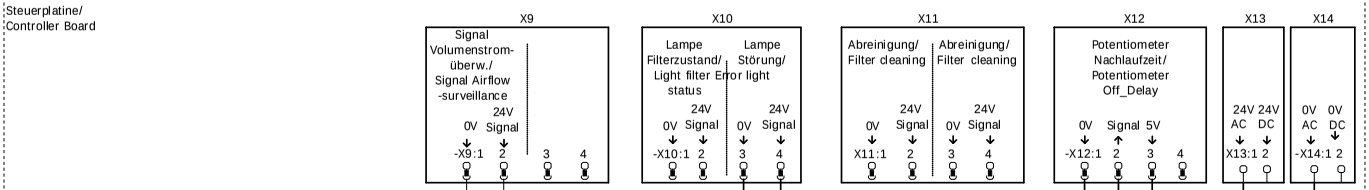

-W10_2
Ölflex
2x0,5
1 2

-W12
Ölflex
4x0,5
1 2 3

8.9 / X13.1

8.9 / X14.1

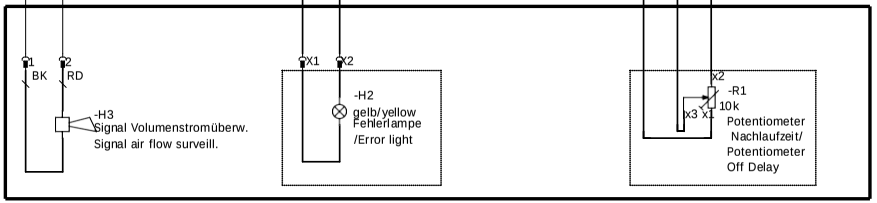

Bedienpaneele/
Operating panel

8

	Datum/Date:	30.06.2015	SRF Maxi		Steuerung/Control circuit 3		
	Bearb./Name:						
	Gepr/Checked:						Blatt/Page: 9
							Blatt/Page: 10

Artikelstückliste/Partlist

F01_001 - DE_EN

Betriebsmittelkennzeichen/ device tag	Menge/ quantity	SCHWEISSKRAFT - Bezeichnung/ article description Kemper	Artikelnummer/ item number Kemper	Lieferant/Supplier	Hersteller - Artikelnummer/supplier Article nr.
-A1	1	Steuerung Profimaster SRF Maxi ab 09.2013	3604583	Kemper	KEM.Steuerplatine_PM_MF
-A1-F1	1	Feinsicherung 2A träge/slow blow		TEG	TEG.2A_T
-F2	1	Trennhebel Sicherungsklemme (leverage fuse clip)	3601558	PHÖNIX	PHO.3004171
-F2	2	Feinsicherung (micro fuse)	3601559	SIBA	SIB.7006565
-F3	1	Trennhebel Sicherungsklemme (leverage fuse clip)	3601558	PHÖNIX	PHO.3004171
-F3	2	Feinsicherung (micro fuse)	3601559	SIBA	SIB.7006565
-F4	2	Trennhebel Sicherungsklemme (leverage fuse clip)	3601558	PHÖNIX	PHO.3004171
-F4	4	Feinsicherung (micro fuse)	3601559	SIBA	SIB.7006565
-F5	1	Motorschutzrelais		SIEMEN	SIE.3RU2116-1.C0
-H1	1	LED-Lampe / UC24V / gruen	3604091	SIEMEN	SIE.3SB3901-1TB
-H2	1	LED-Lampe / UC24V / gelb	3604091	SIEMEN	SIE.3SB3901-1RB
-H3	1	Hupe 24VDC / Pulse 0,8s - 1,2s	3601311	BÜRKLIN	AME.EFM
-H4	1	LED-Strahler; GU5,3; 5W; 12V AC DC	3604125	REI	REI.LED_5W_GU5.3
-H5	1	LED-Strahler; GU5,3; 5W; 12V AC DC	3604125	REI	REI.LED_5W_GU5.3
-K1	1	SCHUETZ, AC-3, 4KW/400V, 1S, AC 24V, 50/60 HZ	1180607	SIE	SIE.3RT2016-2FB41
-M1	1	Motor 1,5 kW einphasen/singlephase;/Voltage and current see nameplate		AC	MOT.1,5kW einphasen
-M2	1	Motor 1,5 kW dreiphasen/three phase;/Voltage and current see nameplate		AC	MOT.1,5kW dreiphasen
-R1	1	Potentiometer 10k 0,2 W	1180620		VOE.W37721
-S1	1	Taster mit Ringbeleuchtung	3604092	ARCOELECTRIC	SCH.RRJTLR
-S3	1	3601961 / Differenzdruckschalter 50 mbar	3601961	Huba	HUB.604.9500000
-S4	1	Temperaturschalter	3604188	Firedect	FIR.KO3406005A
-X1	1	CEE-Stecker 5-polig 16A	3600143	PCE	PCE.015-6
-X2	1	Netzstecker	3600225	Kemper	KEM.115/16

EC-Declaration of Conformity

As per machine directive 2006/42/EG Appendix II 1.A

Manufacturer/seller:	Stürmer Maschinen GmbH Dr.-Robert-Pfleger-Str. 26 D-96103 Hallstadt

hereby declares that the following product

Productgroup:	Schweisskraft®
Machine designation:	SRF Maxi
Article number:	180 0030
Machine Type:	Mobile Welding Fumes Filter
Serial number:	_____
Year of manufacture:	20 ___

complies with all relevant regulations of the aforementioned directive as well as any other,applicable directives (subsequently added) - including the changes applicable at the time the declaration was made.

Applicable EU-directives:	2014 / 35 / EU	Low Voltage Directive
	2014 / 30 / EU	EMC-Directive

The following, harmonised standards have been applied:

EN ISO 12100	Safety of machinery - General prinsiples for design - Risk assessment and risk reduction (ISO 12100:2010)
EN ISO 13857	Safety of machinery – Safety distances to prevent hazard zones being reached by upper and lower limbs
EN 349	Safety of Machinery, Minimum gaps to avoid crushing of parts of the human body
EN610000-6-2	Generic standards - Immunity for industrial enviroments
EN610000-6-4	Grounding principle - Interference emission
DIN EN 60204-1	Safety of machinery - Electrical equipment of machines Part 1: General requirements
EN 13849	Safety-relevant parts of control systems

Responsible person of documentation: Engineering Department, Stürmer Maschinen GmbH, Dr.-Robert-Pfleger-Str. 26, D-96103 Hallstadt

Hallstadt,18.04.2016

Kilian Stürmer
Managing Director

CE

Notes









Stürmer WELT DER MASCHINEN

Stürmer Maschinen GmbH

Dr.-Robert-Pfleger-Straße 26
D-96103 Hallstadt

+49 951 96 555 - 0

info@stuermer-maschinen.de
www.stuermer-maschinen.de







