Machine Translated by Google

holzstar
Holzbearbeitungsmaschinen

SERIES

Operating instructions

thickness planer

- **DH 330-2**
- **DH 330-2 Spiral**



DH 330-2 Spiral

Machine Translated by Google

Table of contents

1 Safety..... 4 1.1 Safety Instructions
(Warnings) ..... 4 1.3 Reasonably Foreseeable
Misuse..... 6 1.4 Residual
Risks ..... 7 1.5 Personnel
Qualifications..... 7 1.6 General Safety
Instructions..... 8 1.7 Safety
Markings ..... 10 1.8 Electrical
Requirements..... 10
2 Technical Data..... 11 2.1 Type
Plate..... 11 3 Transport, Packaging,
Storage..... 12 3.1
Transport..... 12 3.2
Packaging..... 13 3.3
Storage..... 13 4 Device Description DH
330-2..... 13 5 Device Description DH 330-2
Spiral..... 14 5.1 Digital
Display 15 6
Installation 16 7
Operation..... 19
7.1 Entry and exit dents 22
8 Care, Maintenance and Repair..... 23 8.1
Care..... 23 8.2 Maintenance/
Repair..... 23 8.3 Blade
Replacement ..... 24 8.4 Brush Inspection and
Replacement..... 26 9 Troubleshooting
Table ..... 27 10 Spare
Parts ..... 28 10.1 Ordering Spare
Parts..... 28 10.2 Spare Parts
Drawings..... 29 11 Circuit
Diagrams ..... 33 11.1 Circuit Diagram DH
330-2..... 33 12 EU Declaration of
Conformity 34 13
Appendix..... 35 13.1
Copyright ..... 35 13.2 Limitation of
Liability 35 13.3
Storage..... 35 13.4 Disposal Information / Recycling
Options:..... 35 13.5 Disposal via Municipal Collection
Points ..... 36 14 Product
Monitoring..... 36 15
Notes 37

Machine Translated by Google

Foreword

Dear Customer,

Thank you very much for purchasing the holzstar Thickness planer.

holzstar Woodworking machines offer the highest level of quality and technically optimal solutions.
and impress with their outstanding price-performance ratio. Continuous development and
Product innovations ensure that technology and safety are always up to date.

Before commissioning, please read these operating instructions thoroughly and familiarize yourself with the product.
Familiarity with the thickness planer. Also, ensure that all persons operating the thickness planer are always familiar with it beforehand.
Have read and understood the operating instructions. Keep these operating instructions carefully.
Area of the thickness planer.

information

The operating instructions contain information on safe and proper installation, operation and
Maintenance of the thickness planer. Adherence to all instructions contained in this manual is essential.
It ensures the safety of people and machines.

The manual defines the intended purpose of the thickness planer and contains all the necessary information.
for economical operation and a long service life.

The Maintenance section describes all maintenance work and functional tests that the user must perform.
must be carried out regularly.

The illustrations and information contained in this manual may be subject to change.
The current construction status of your thickness planer may differ. As a manufacturer, we are constantly striving for improvement and
We strive to renew our products, therefore changes can be made without this
will be announced in advance. The illustrations of the thickness planer may differ in some details from the
Illustrations in this manual may differ, however this does not affect the usability of your
Machine.

No claims can therefore be derived from the information and descriptions provided. Changes and
We reserve the right to correct errors!

Your suggestions regarding these operating instructions are an important contribution to optimizing our work.
which we offer our customers. Please contact us with any questions or suggestions for improvement.
our service.

Should you have any further questions after reading these operating instructions, or should you encounter a problem
If you cannot resolve the issue using these operating instructions, please contact your specialist dealer.
Connection.

Manufacturer information:

holzstar - Stürmer Maschinen GmbH
Dr.-Robert-Pfleger-Straße 26
D-96103 Hallstadt/Bamberg

fax (+49)0951 - 96555-55
Mail: info@holzstar.de
Internet: www.holzstar.de

Product identification:

thickness planer	Article number
DH 330-2	5904335
DH 330-2 Spiral	5904336

Original operating
instructions according to DIN EN ISO 20607:2019

Issue: January 7, 2026
Version: 2.01

Language: German
Author: ES/LA

Machine Translated by Google

1 Security

Conventions of representation

ÿ provides additional information
ÿ prompts you to take action
ÿ **Enumerations**

This part of the operating instructions

ÿ explains the meaning and use of the terms used in this operating manual
Warning notices,
ÿ defines the intended use of the thickness planer,
ÿ points out the dangers that may arise for you and others if these instructions are not followed.
could
ÿ informs you about how to avoid dangers.

Please note the following in addition to the operating instructions.

the **applicable laws and regulations,**
the legal provisions for accident prevention ,
ÿ the prohibition, warning and mandatory signs.

Always keep the documentation near the device.

1.1 Safety instructions (warnings)

Hazard classification

We divide the safety instructions into different levels. The table below gives you an overview.
Overview of the assignment of symbols (pictograms) and signal words to the specific hazard and the (possible) consequences.

pictogram	Signal word	Definition/Consequences
	**DANGER!**	**Failure to comply poses an immediate danger that could lead to serious injury or death.** **High level of risk.**
	WARNING!	**Failure to comply poses a potential danger that could lead to serious injury or death.** **Medium risk level of hazard.**
	CAUTION!	**Failure to comply or a risky procedure poses a potential danger that could lead to personal injury or property damage.** **Low level of risk.**
	**DANGER!**	**Situations that can lead to property damage and impair the function of the product.**
	**information**	**Application tips and other important/useful information and advice.** **No dangerous or harmful consequences for persons or property.**

Machine Translated by Google

Pictograms that indicate specific dangers



General
Warning signs



Warning about electrical
Tension



Warning about
Hand injuries



Warning about hot surface



Warning about automatic
start



Warning of obstacles on the ground



Warning: Risk of tipping!



Warning: Suspended load!



Warning:
Flammable substances!



Warning: Counter-rotating rollers!

Pictograms indicating commands/prohibitions



Use protective clothing!



Use hearing protection!



Follow the instructions!



Unplug the power cord!



Use eye protection!



Use hand protection!



Use foot protection!



General
mandatory sign!



No reaching inside!

Machine Translated by Google

1.2 Intended Use The thickness planer is

intended exclusively for planing dry, solid wood workpieces. The machine may only be used within the technical specifications and operating limits stated in these operating instructions.

Proper use includes compliance with all safety-related instructions, operating conditions and technical specifications as set out in this manual.

Part of the intended use is that you carefully observe the operating instructions and comply with the inspection and maintenance instructions.



1.3 Reasonably Foreseeable Misuse Any use of the thickness planer beyond its intended purpose or in a manner other than that specified is considered misuse. Operating personnel must be adequately qualified or have received appropriate and practical training to be authorized to operate the thickness planer. To avoid misuse, the operating instructions must be read and understood before commissioning.

Possible misuses include: ÿ Using the thickness planer to work on materials other than wood, e.g., stone, plastic, or metal. ÿ Using the machine with parameters (e.g., feed rate, cutting depth) that are unsuitable for wood or are inadmissible.

ÿ Machining of over- or undersized workpieces that fall outside the dimensions specified in the technical data The specified dimensions are located.

ÿ Working with workpieces that are not or insufficiently secured, not safely guided or supported. ÿ Misuse of the machine, e.g., use as a workbench, storage unit, or transport aid. ÿ Operation without fully functioning or removed safety devices such as hoods, guards, or Extraction hoods.

ÿ Bypassing, altering, or manipulating safety or protective devices. ÿ Performing maintenance or adjustment work on the unsecured machine or while it is switched on. Main switch.

ÿ Failure to observe prescribed maintenance intervals or instructions for inspection and cleaning. ÿ Continued operation despite visible wear, damage, or malfunctions. ÿ Service work performed by untrained or unauthorized personnel. ÿ Installation of unauthorized spare parts or use of accessories not approved by the manufacturer. became.

ÿ Technical changes or modifications to the machine or tooling systems. ÿ Operation by untrained, uninstructed, or unauthorized personnel. ÿ Distractions during operation, e.g., by mobile devices, conversations, or other disturbances. ÿ Deliberate or reckless interference in the work area during operation. ÿ Commissioning or using the machine without having fully read and understood the operating instructions. have.

ÿ Commercial or industrial use, unless the machine is designed or approved for that purpose.

Machine Translated by Google

WARNING!



Improper use of the thickness planer ÿ creates dangers for personnel, ÿ endangers the thickness planer and other assets of the operator, ÿ may impair the function of the thickness planer.

Improper use of the machine, as well as disregard of safety regulations or operating instructions, excludes the manufacturer's liability for resulting damage to persons or property and voids the warranty!

1.4 Residual risks

Even if all safety regulations are observed and the machine is used as intended, residual risks remain, which are listed below, among others. • Risk of injury during maintenance and service work, especially if this is carried out on an unsecured or switched-on machine. • Risk of injury from moving machine parts, especially after removing safety covers or protective devices.

• Risk of injury to the upper limbs (e.g., hands, fingers) from the rotating cutterhead. • Risk of injury from workpiece parts being thrown back or flying around. • Risk of injury from body parts reaching too close to working machine parts. • Risk of direct or indirect contact with electrical parts (live components), especially after removing protective covers or damaging the insulation. • Heat generation from components, which can cause burns or other injuries. • Risk of inhaling wood dust, especially without suitable extraction or respiratory protection. • Hearing damage from prolonged use of the machine without or with damaged hearing protection. • Risk of injury from the machine falling due to improper handling, transport, or movement.

1.5 Staff qualifications

Target audience

This guide is intended for ÿ the operators, ÿ the operators, ÿ the maintenance personnel.

Therefore, the warnings relate to both the operation and the maintenance of the thickness planer.

Clearly and unambiguously define who is responsible for the various tasks on the thickness planer (operation, maintenance and repair).

Unclear responsibilities are a security risk!

This guide lists the qualifications of the individuals for the various tasks:

operator

The operator received instruction from the operator regarding their assigned tasks and potential hazards resulting from improper conduct. The operator may only perform tasks beyond normal operation if specified in these instructions and expressly authorized by the operator.

electrician

Due to their professional training, knowledge and experience, as well as knowledge of the relevant standards and regulations, qualified electricians are able to carry out work on electrical systems and to independently recognize and avoid potential hazards.

The electrical specialist is specifically trained for the work environment in which they work and is familiar with the relevant standards and regulations.

Machine Translated by Google

Specialist

personnel, due to their professional training, knowledge and experience as well as knowledge of the relevant regulations, are able to carry out the tasks assigned to them and to independently recognize and avoid possible dangers.

Instructed person

The person being trained was instructed by the operator about the tasks assigned to them and the potential dangers of improper behavior.

Authorized persons

Authorised persons for operation and maintenance are the instructed and trained specialists of the operator and the manufacturer.

Only authorized personnel are permitted to operate the thickness planer! Improper operation can pose risks to people, machinery, and the environment.

The operator must

• Ensure that the personnel deployed are technically and mentally qualified to operate the machine. • Train the personnel, • Instruct the personnel at regular
intervals (at least once a year) about
- all safety regulations relating to the thickness planer, - operation, - the
recognized rules of
technology, ÿ check the staff's level of
knowledge, ÿ document the training/instruction, ÿ
have participation in the training/instruction confirmed by
signature, ÿ check whether the staff works in a safety-conscious manner and observes the operating instructions.

The operator must

have received training in the operation of woodworking machines, know their function and operation,
before commissioning

- have read and understood the operating instructions, - be familiar
with all safety devices and regulations.

1.6 General Safety Instructions ÿ Never work under the

influence of illnesses that impair concentration, fatigue, drugs, alcohol or medication.



The **thickness planer may only be operated and maintained by persons who have read and understood these operating instructions.**

The operator must be adequately trained in application, adjustment, and operation. Switch off the machine and
disconnect the [unclear text] when replacing consumables and wear parts.
Power plug.

Switch on the machine only immediately before starting processing. Do not leave the machine unattended while it is in operation.

Never open the safety covers while the thickness planer is running. Keep the work area and the floor around
the thickness planer clear of any objects that could compromise your stability or pose a tripping hazard. Keep your work area tidy. **Clutter can**
lead to accidents.

Check the danger zone before and during work to ensure that no [objects] are present.
Unauthorized persons may be present there.
If the power cord is damaged , **immediately shut down the machine and have it checked.**
Have this replaced by a qualified electrician.

• When routing the power cord, ensure that it is not pinched, bent, or gets wet. • Protect the thickness planer from dampness and
moisture to prevent the risk of short circuits or
to avoid electric shock.

Machine Translated by Google

Do not use the thickness **planer in potentially explosive atmospheres or near**
Flammable gases, liquids, and solids. Potential sparks pose a risk of explosion or fire.
Fire hazard.

Use the thickness **planer only in dry rooms or dry environments and ensure a sufficiently lit work area.**

Only operate the thickness planer with all safety devices fully and correctly installed and
Do not change anything on the machine.

When working with the thickness planer , **hearing protection must always be worn. Wearing loose clothing (ties, scarves, open jackets, and non-tight-fitting garments) is prohibited. A hairnet must be worn if you have long hair.**

Use only original spare parts.

To protect against electric shock , **only have the machine connected to a qualified electrician.**
Connect to a suitable and protected power supply.

Before operation, inspect all workpieces for foreign objects such as nails and screws .

Use suitable material supports when handling heavy or bulky workpieces, e.g.
Roller stands (optional equipment).

Use suitable clamping or guiding devices for flat workpieces to ensure a safe and
to ensure precise planing.

Always adjust the thickness planer to the workpiece width. The unused part of the cutterhead
must be covered

Do **not use tools that are cracked or have been deformed.**

Wear suitable gloves when changing tools.

Before any maintenance or adjustment work , **the machine must be switched off and the power plug unplugged.**

ÿ Check that all repair and adjustment tools have been removed before switching on.

Before any maintenance or repair , **the thickness planer must be secured against being put into operation.**

Do not use compressed air to clean the machine or to remove chips.

All protective and safety devices must be reinstalled immediately after repair or maintenance has been completed.

Do not **plane dirty boards; dirt and small stones are abrasive and will wear down the blade.**

Remove nails and staples. Use the planer only for cutting wood.

Avoid branches. Branches can break off and block the blade. Any object that hits the planer blades can be violently ejected from the planer and pose a risk of injury.

The operator must be at least 18 years old. Trainees are not permitted to operate the machine .
It may only be operated from the age of 16 and only under the constant supervision of a qualified person.

FIRE HAZARD



Ensure that no flammable, ignitable materials are near the work area.
rich are.

Keep suitable extinguishing agents ready.

Avoid the spread of open flames due to sparks, slag, and glowing embers .
Material.

In a **fire , burning plastic parts can cause toxic emissions. Therefore**
It is necessary to comply with the general fire safety regulations.

The **machine is not equipped with fire extinguishers. The operator is therefore obliged to**
Premises where the machine is used must be equipped with suitable fire extinguishers of an approved type in the appropriate number. They must be located in a visible area and protected from damage or misuse. The operator must be familiar with their use in accordance with applicable regulations.

Electrical equipment must not be extinguished with water. **Powder or halon fire extinguishers must be placed in the premises and operators must be familiar with their use.**
If a water or foam fire extinguisher is located near the device, it can be used after switching off the power supply.

The **surface of electrical protective devices and surfaces on which an increased**
Surfaces where heat generation is expected (e.g., electric motor) should be regularly cleaned of dust and other contaminants to ensure that the efficiency of surface cooling is not impaired.

Machine Translated by Google

1.7 Safety markings The following safety markings and

symbols are affixed (Fig. 1-1), which must be observed and followed:



Fig. 1-1: Safety Signage - 1 Mandatory sign: Observe operating instructions, wear eye protection, wear a face mask, wear foot protection, wear hearing protection, unplug the power cord. | 2 Prohibition sign: Operation with long hair prohibited!, Operation with ties prohibited!, Use of gloves prohibited! | 3 Warning sign: General warning sign!, Warning of rotating rollers!, Warning of hand injuries! | 4 Warning sign: Warning of electrical voltage!

A notice:

Damaged or missing safety symbols on the thickness planer can lead to errors resulting in personal injury and property damage. The safety symbols affixed to the thickness planer must not be removed. Damaged safety symbols must be replaced immediately.

The following must be

observed: ÿ If the safety markings become faded or damaged during the machine's lifetime, new signs must be fitted immediately.

From the **moment the signs are not immediately recognizable and understandable at first glance, to take the device out of service until the new signs are installed.**

1.8 Electrical Requirements To avoid electrical

hazards, fire risks, or damage to the equipment, suitable circuit protection must be used. The machine should be operated on a separate circuit. A damaged power cord – for example, due to wear or cuts – must be replaced immediately.

1.8.1 Grounding

Warning!

The device must be grounded during operation. In the event of a fault, grounding provides the path of least electrical resistance and protects the operator from electric shocks. The power cord is equipped with a grounding conductor (green, possibly with yellow stripes) and a grounding plug, which must only be plugged into a properly grounded outlet.

The plug must not be altered. If it does not fit, a suitable socket must be installed by a qualified electrician. The grounding conductor must not be connected to live contacts. If you are unsure about the grounding, seek expert advice.

1.8.2 Environment

The thickness planer is intended for indoor use only. It must not be exposed to rain or moisture.

1.8.3 Extension cables When

using extension cables, care must be taken to ensure that they are undamaged, suitable for outdoor use and designed for the power consumption of the machine.

The conductor cross-section must be adequately sized to prevent voltage drops, power loss, and overheating. Extension cords must be laid in such a way that they are not run over or come into contact with sharp edges, moisture, or heat sources. Damaged cables must not be used and must be replaced immediately or repaired by qualified personnel.

Machine Translated by Google

2 Technical Data

Model		DH 330-2 / DH 330-2 Spiral
Article number		5904335 / 5904336
Designation	Unit	Value
Length (product)	mm	max. 1185 | min. 640
Width/Depth (product)	mm	670
Height (product)	mm	max. 450 | min. 350
Weight (net)	kg	49.5
Width with extensions unfolded	mm	1185
Input power of drive motor	kW	1.8
Output power of drive motor	kW	1
Connection voltage	V	230
Phase(s)	Ph	1
Type of current		AC
Mains	Hz	50
frequency, maximum chip	mm	3.2
removal, planer/thicknesser table length	mm	520
Thicknessing table width	mm	330
Minimum working height and thickness.	mm	3.2
Working height, maximum thickness.	mm	152
Maximum chip removal,	mm	3.2
thickness, feed rate,	m/min	4 | 7
cutterhead type		planer blades / spiral cutterhead
Number of knives		3 / 30
Planer shaft diameter	mm	46.8
Planer shaft speed	min-1	9400
Maximum planing width.	mm	330
Suction nozzle diameter	mm	60/100
Sound pressure level Lp	dB	101
Sound power level Lw	dB	108

2.1 Type plate



Fig. 2-1: Type plate DH 330-2 Spiral

Machine Translated by Google

3. Transport, packaging, storage

3.1 Transport

Upon delivery, inspect the thickness planer for any visible transport damage. Should you find any damage to the If you discover the device, report it immediately to the transport company or the retailer.

3.1.1 Notes on transport

Improper transport of individual devices, packaged or unpackaged, unsecured
Stacking devices on top of each other or next to each other is prone to accidents and can cause damage or malfunctions for which we assume no liability or guarantee.

Delivery contents secured against shifting or tipping with a sufficiently dimensioned forklift truck transport to the installation site.

The thickness planer must only be transported with the motor switched off and disconnected from the mains power supply.

WARNING!



Risk of injury from equipment tipping over and falling from the forklift, Pallet truck or transport vehicle.

Use only transport equipment and lifting devices that can support the total weight can record.

3.1.2 General hazards during internal transport

WARNING: RISK OF TIPPING!



The machine may only be lifted if it is adequately secured.
Employees must be outside the danger zone, the reach of the load.
Warn employees and point out the danger to them.
Transport may only be carried out by authorized and qualified persons using a forklift or a suitable vehicle .
The total weight must be covered by a pallet truck. Inadequately qualified
personnel cannot assess the risks involved in transporting the machine and expose themselves and others to the danger of serious or fatal injury. Act responsibly during transport and always consider the consequences. Avoid daring and risky actions.

Inclines and declines (e.g., driveways, ramps, and similar sections) are particularly dangerous. If driving on such sections is unavoidable, special caution is required.
Check the transport route before starting the transport for possible hazards, unevenness and obstructions, as well as for sufficient strength and load-bearing capacity.
Hazardous **areas , uneven surfaces, and defects must be inspected before transport. Any attempt by other employees to remove hazards, defects, or uneven surfaces during transport poses significant risks.**

Careful planning of internal transport is therefore essential!

3.1.3 Transport using a pallet jack/forklift

Care must be taken when unloading the transported items upon delivery and during internal transport .
Proceed as directed, paying attention to the symbols and instructions on the packaging.
Use **only the designated anchor points.**
Remove **packaging only shortly before assembly.**
The **forklift must be adequately sized to lift and transport the machine's load. All safety regulations must be met.**
The **forklift may only be operated by a qualified person. All loose parts must be securely fastened to the machine. The arm must be secured to the vise (using rope, stretch film, or other fixing agents).**

The machine must be carefully lifted and moved without any collision of parts .
To enable the machine to be used with the floor, wall, etc.

Machine Translated by Google

3.2 Packaging Keep

the packaging for a possible move, but at least until the end of the warranty period. All packaging materials and packing aids used for the thickness planer are recyclable and must generally be recycled.

Cardboard packaging components should be shredded and placed in the waste paper collection. The films are made of polyethylene (PE) and the cushioning materials of polystyrene (PS). These materials should be taken to a recycling center or to your local waste disposal company.

3.3 Storage Store

the thickness planers thoroughly cleaned in a dry, clean and frost-free environment.
Do not store or transport the thickness planers unprotected outdoors or in humid environments.

4 Device description DH 330-2

Illustrations in these operating instructions serve for basic understanding and may differ from the actual design.

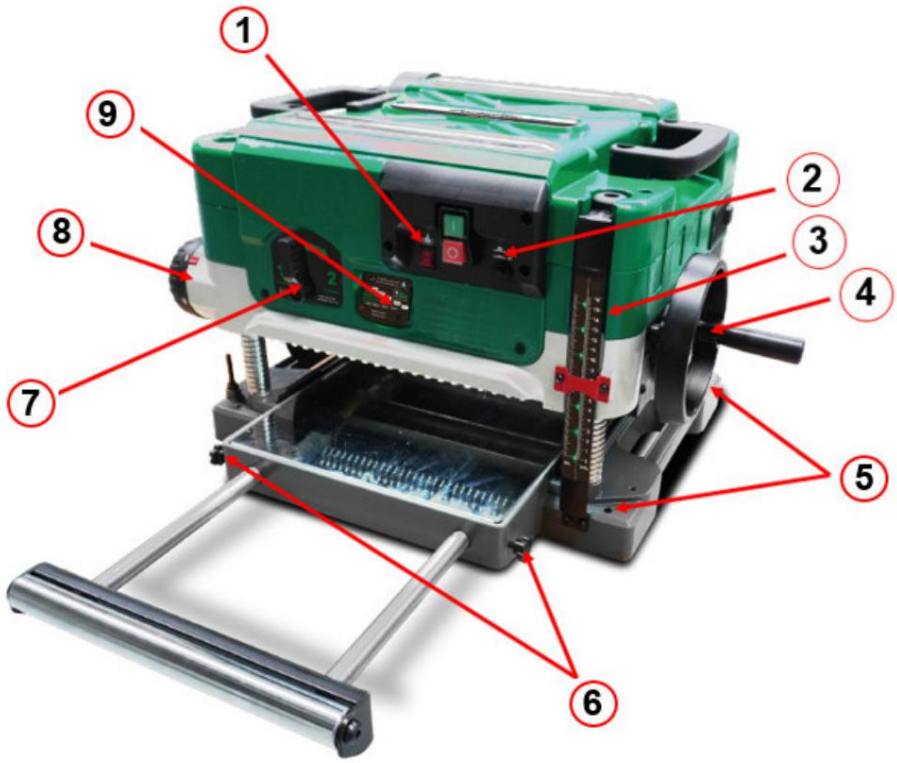

Fig. 4-1: Device description

Item	Description
1	Workspace lighting
2	motor protection switches
3	Depth scale
4	Handwheel for adjusting the working height
5	Mounting holes
6	Locking screws for support extension
7	Feed rate setting
8	Setting the stop
9	scale cutting depth

Machine Translated by Google

5 Device description DH 330-2 Spiral

**The new DH 330-2 Spiral thickness planer is based structurally and functionally on the existing model.
DH 330-2. There are only two technical differences:**

1. Spiral cutter shaft

**Instead of the previous planer blades, the new DH 330-2 Spiral model features a spiral cutterhead.
equipped. The spiral cutterhead has 30 knives. All other features of the planing unit correspond.
the DH 330-2 model.**

2. Digital display

**The DH 330-2 SPIRAL model also features a digital display. This is used to display the
set working height dimension.**

Validity of the existing instructions

**All safety-relevant information, technical data, operating instructions and maintenance specifications of the
The standard model DH 330-2 also applies to the DH 330-2 Spiral, unless otherwise stated in this supplement.
A different arrangement has been specified.**

Functions that have not been explicitly changed remain unchanged.

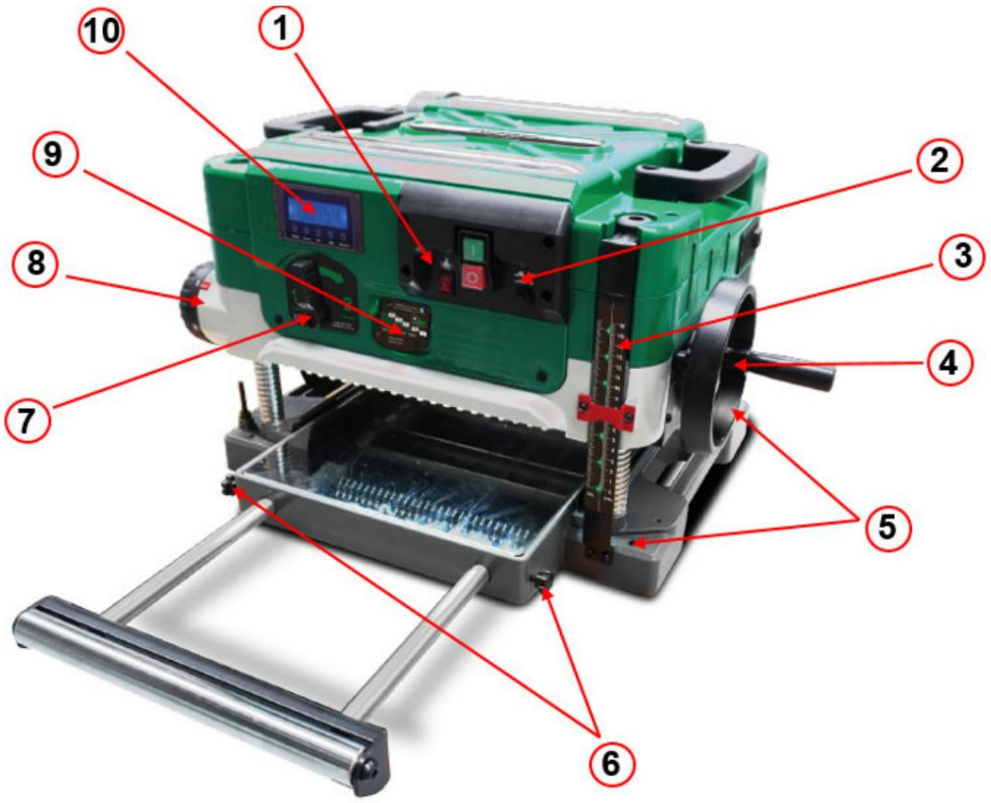

Fig. 5-1: Device description

Item	Description	Item	Description
1	Work area lighting	2	Motor protection switch
3	Depth scale	4	Handwheel for adjusting the working height
5	mounting holes	6	locking screws for Edition expansion
7	Feed rate setting	8	Setting the stop
9	scale cutting depth	10	Digital Display

Machine Translated by Google

5.1 Digital Display The

digital display helps you to precisely set the desired planing thickness. It shows both the set cutting depth and the actual thickness of the workpiece after the planing process.



5.1.1 Key functions and their description

1) ZERO button

• Sets the display to "0" and establishes a new zero point. • After pressing the ZERO button, you can adjust the headstock height. • The display then shows the headstock's travel distance from the newly set zero point.
to.

2) in/mm key

ÿ Switches the display unit of measurement between millimeters (mm) and inches (inch).

3) SET button

ÿ Allows the display to be calibrated so that the displayed value reflects the actual thickness of the corresponds to a planed workpiece.

4) ABS button

ÿ Indicates the absolute planing height, i.e., the distance from the lowest point of the planer blade to the Table surface.

ÿ This corresponds to the actual workpiece thickness after planing.

DANGER!



If the headstock height is adjusted while the machine is not connected to the power supply, the digital display may show incorrect values. It is recommended to check the displayed thickness value after each connection to the power supply. If the value is incorrect, perform the calibration described below.

5) ON/OFF button

ÿ Turns the digital display on or off.

Machine Translated by Google

Adjusting the digital display to the actual workpiece thickness

1. Connect the machine to the power supply.

2. Press the ABS button to display the current absolute value.

**3. Set the desired planing height, switch on the machine and feed in a flat board.
through a complete planing process.**

4. Measure the thickness of the planed workpiece and compare it to the value on the digital gauge.

Advertisement.

5. If the value does not match,

6. Press and hold the SET button until the first digit flashes,

7. Briefly press the SET button to move to the next position.

8. Change the digit at the respective position using the ABS key.

**9. Once the correct value is set, press and hold the SET button again to save the setting.
save.**

6 Assembly

DANGER:

**The device must not be connected to the power supply until it is fully assembled.
Premature connection can lead to the machine starting up unintentionally and cause serious injuries.**



10. Before use, the thickness planer must be mounted horizontally on a stable workbench or worktable. For secure attachment, there are corresponding holes at the four corners of the base, through which the machine can be firmly screwed to the work surface.

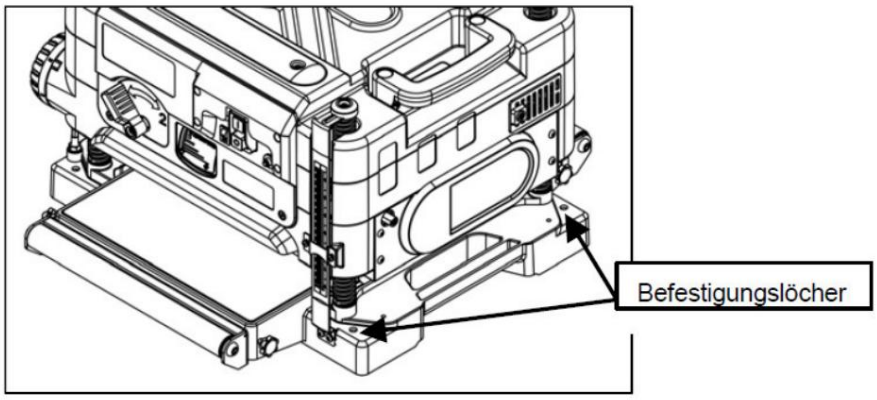

Fig. 6-1: Mounting of the thickness planer

11. First, remove the countersunk screw and washer from the handwheel shaft. Then, place the handwheel onto the shaft and secure it with the screw and washer that were removed earlier. Ensure it is tight and correctly seated.

Machine Translated by Google

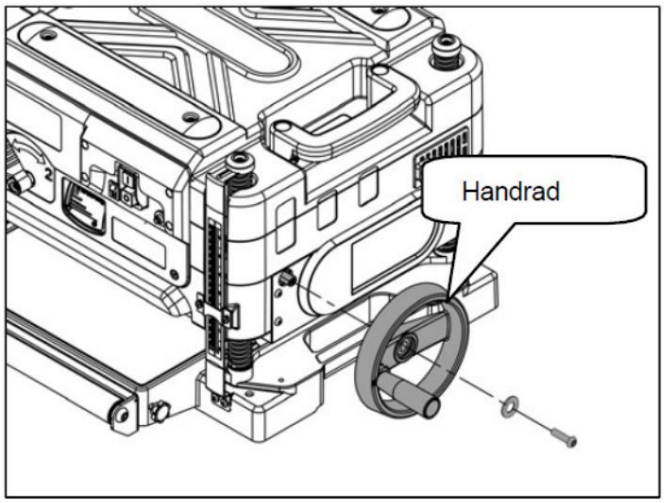

Fig. 6-2: Assembly of the handwheel

12. Turn the height adjustment handwheel to raise the cutterhead. Remove the polystyrene sheet between the main table and the cutterhead. This insert serves as transport protection and must be completely removed before use.
If the table is covered with a protective film, this must also be removed before starting work to ensure proper function and safety.

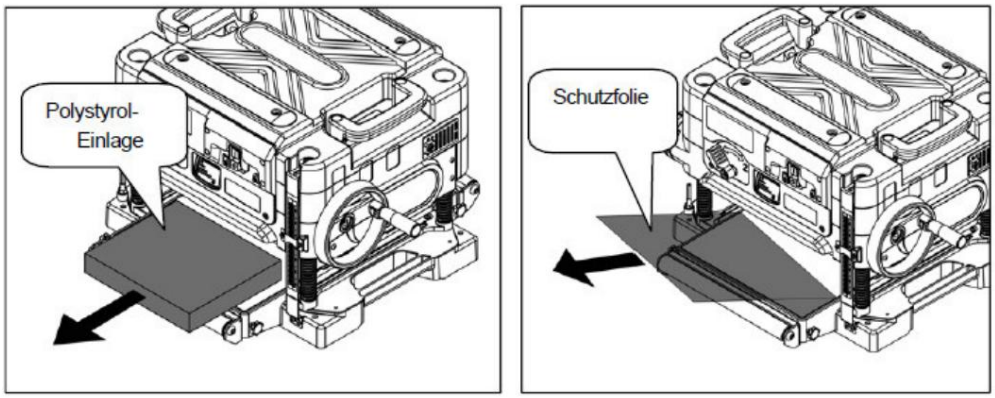

Fig. 6-3: Removing the polystyrene protective film

13. To assemble, press the locking pin on the dust discharge chute and slide the notches of the dust discharge extension over it. Rotate the extension until the locking pin audibly clicks into place.
To remove, use a screwdriver to push down the locking pin on the dust ejection port.
Rotate the extension until the pins are released from the notches, then pull the connector straight off.

Machine Translated by Google

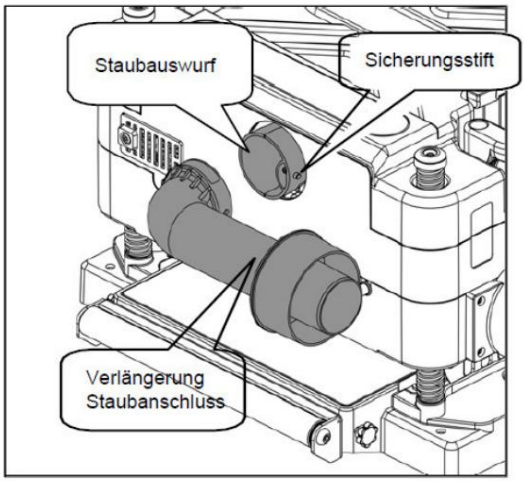

Fig. 6-4: Assembly and disassembly of dust discharge chute

14. Slide the adapter onto the end of the dust ejection opening of the extension and pull the Tighten the flat-head screw securely. Open the zipper on the bottom of the filter bag and place the spring in the arm of the filter bag. Slide the arm with the spring over the adapter on the dust outlet.

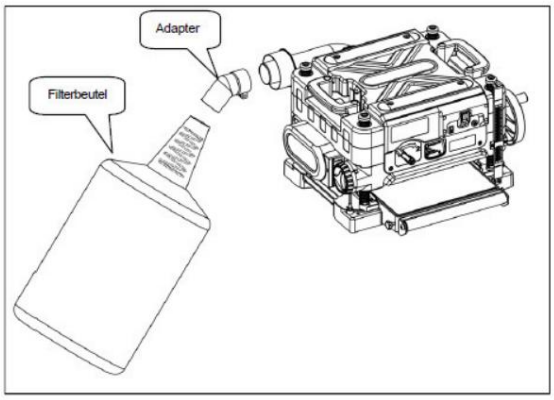

Fig. 6-5: Filter bag

Machine Translated by Google

7 Operation

1. Turn the handwheel to raise or lower the cutterhead. The depth scale indicates the current height of the cutterhead above the main table and is used for precise adjustment of the working height.

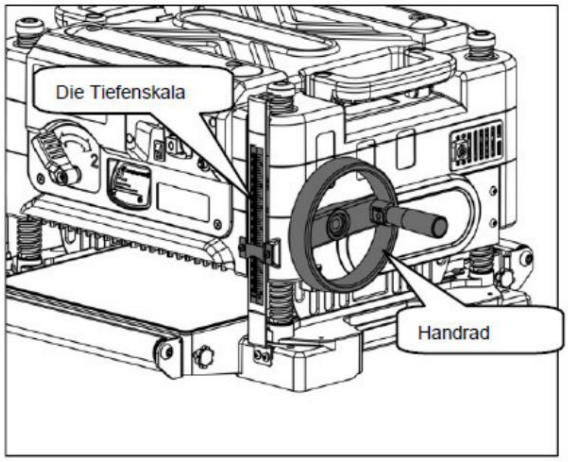

Fig. 7-1: Setting the working height using the depth scale

2. The thickness planer is equipped with a cutting depth indicator. It shows how much material is removed from the workpiece in a single pass with the cutterhead in its current position.

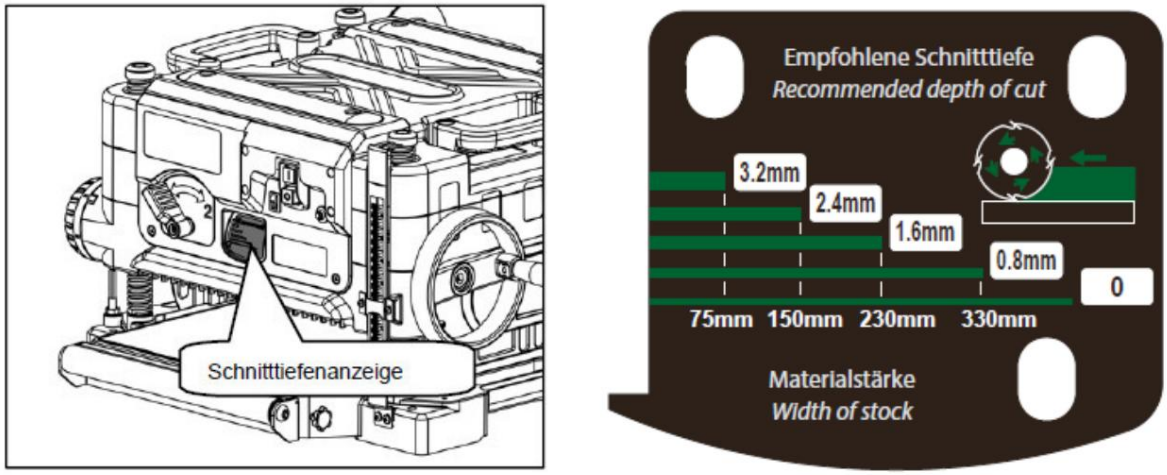

Fig. 7-2: Cutting depth indicator

3. A rotary knob with six stop positions for presetting the desired workpiece thickness is located on the left side of the machine. This knob allows you to set the desired final thickness to be achieved during planing.

Adjustment procedure: 1. Ensure the table is set to over 30 mm before changing the stop.
2. Release the locking knob, turn the adjustment knob until the desired thickness aligns with the red mark. Then lower the table.

3. Process the workpiece in several steps until the desired final thickness is reached.

A notice:

To adjust the stop setting, raise the table correctly, then turn the knob to the desired value.

Never forcibly lower the table below the preset height. This can cause permanent damage to the height adjustment mechanism.

Machine Translated by Google

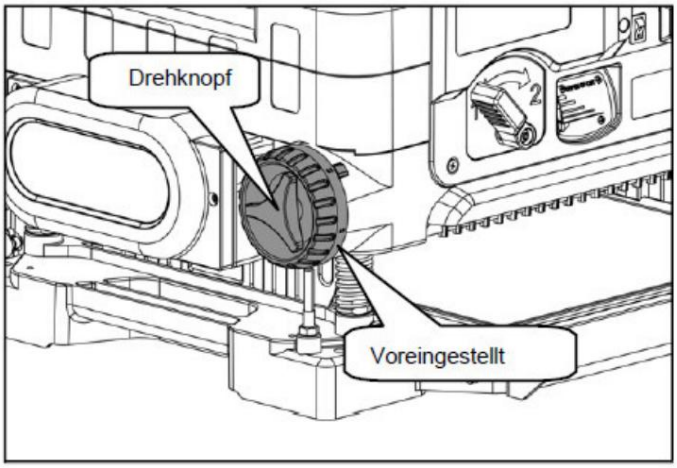

Fig. 7-3: Adjustment process of the stop points

4. The thickness planer has two selectable feed speeds:

- **For faster material removal, set the speed to "2".**
- **For finishing with a finer surface, use setting “1”.**

The selection of the appropriate feed rates depends on the desired machining result.

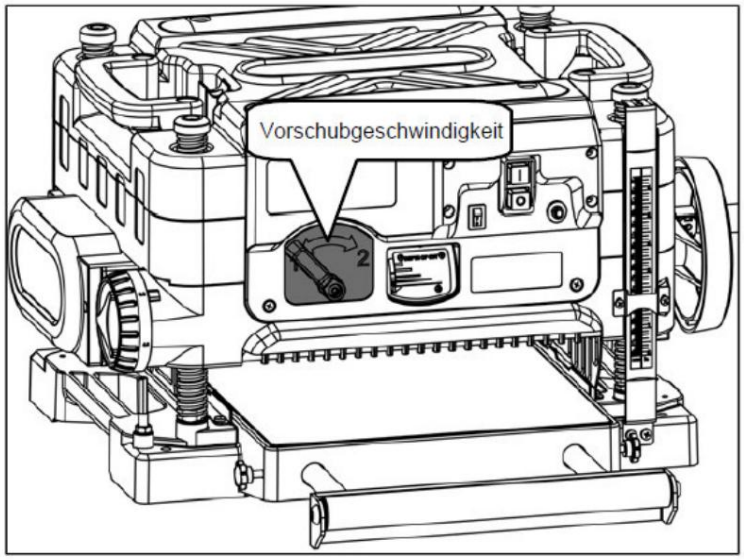

Fig. 7-4: Adjusting the feed rate

A notice:

The feed rate may only be changed while the planer is running.

When planing particularly hard or highly grained woods, the use of speed "1" is recommended. The slower feed rate ensures a clean planing finish and reduces blade wear.

Machine Translated by Google

5. The support extension serves to support long workpieces during the planing process.
To extend: 1.

Loosen the locking screws next to the table.
Pull out the 2nd edition extension.
3. Tighten the locking screws.

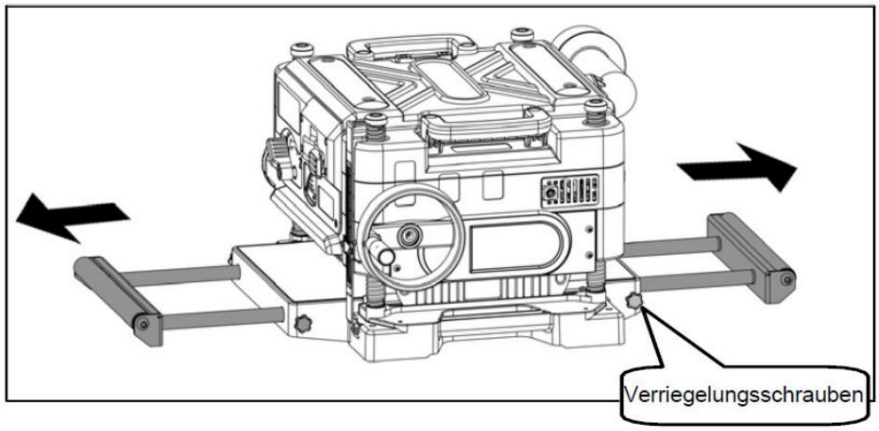

Fig. 7-5: Edition expansion

6. The machine is equipped with two LED lights that serve as both a cutting depth indicator and a...
Provide additional lighting for the work table.

If necessary, switch on the LED lights to ensure optimal visibility while working.

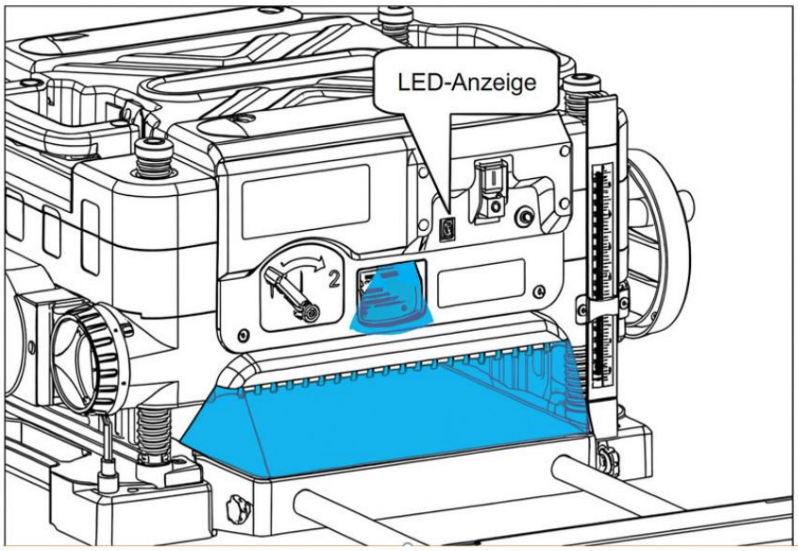

Fig. 7-6: LED lights

7. Adjust the cutting depth so that an initial shallow cut of approximately 0.5 mm is made. Switch
Turn on the machines and wait until the engine has reached full speed.

Insert the plate against the support extension and then into the machine.
Release the board as soon as the machine starts planing and let it be automatically drawn in.

Machine Translated by Google

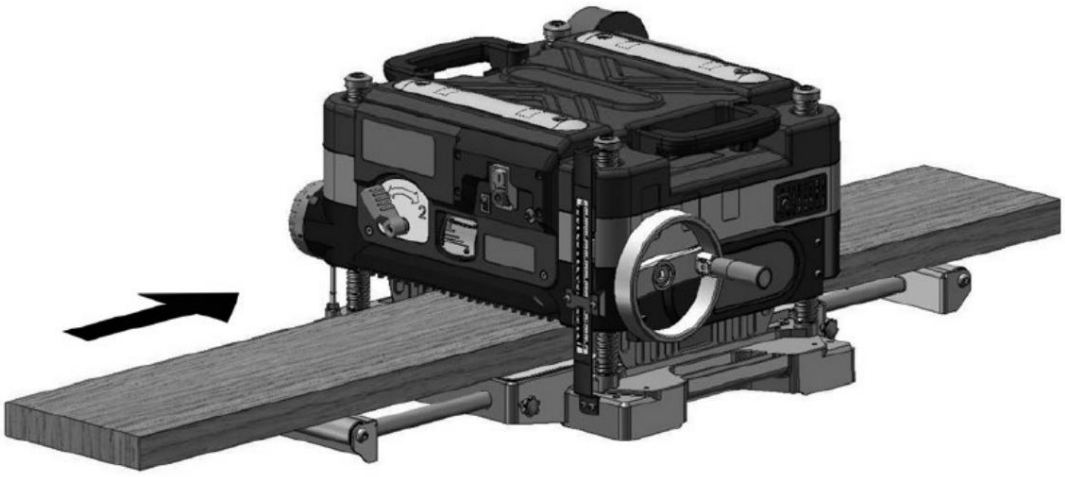

Fig. 7-7: Operation

7.1 Entry and exit dents

1. Entry and exit dents are depressions at both ends of the workpiece caused by uneven force.
   on the cutterhead at the entry and exit of the machine.

2. Entry and exit dents occur if the workpiece does not lie flat and across its entire surface on the support extension or if there is an
   uneven contact surface with the feed roller.

3. To avoid entry and exit dents, gently push the workpiece upwards as it is inserted.
   until the outfeed roller takes over the workpiece.

4. At the end of the cut, take the workpiece by gently pushing it upwards.
   as soon as the feed roller loses contact.

5. When planing several workpieces of the same thickness, they should be placed next to each other to prevent infeed and outfeed.
   To minimize runout dents.

6. Entry and exit indentations are more pronounced in deeper cuts.

Machine Translated by Google

8 Care, maintenance and repair

Regular and thorough maintenance of the thickness planer is essential for a long service life, good working conditions, and maximum productivity. Ensure that maintenance work is carried out regularly.

Warning! Danger if personnel are insufficiently qualified:



Insufficiently qualified persons cannot assess the risks to the user arising from improper repair work on the thickness planer and expose themselves and others to the danger of serious injury.

All maintenance work should only be carried out by qualified personnel.

If maintenance and repair work on this machine is carried out by persons who are not authorized to perform this work, the warranty claim against the manufacturer will be void.

Daily care and maintenance: ÿ Clean the machine

after each use. ÿ Replace damaged safety devices immediately.

Weekly care and maintenance work: Clean **housing and**

machine surfaces. Clean protective devices, air vents, and
motor housings. Check tools for damage and replace tools if necessary.

Monthly maintenance: ÿ Check the

machine's mounting screws and tighten them if necessary. ÿ Check electrical safety devices and
protective devices and replace them if necessary.

8.1 Maintenance

The machine must always be kept clean. Never use harsh cleaning agents. These can damage or destroy components. 0 ÿ Clean the machine of shavings and wood dust with a dry cloth. ÿ Clean the motor and switches with a dry cloth. Never use water!

ÿ Clean the housing and machine surfaces only with a damp cloth and a little detergent.

Do not use solvents. These could damage the plastic parts of the machine. Ensure that no water can get inside the machine.

ÿ Spray or oil all unpainted metal surfaces with a little anti-rust spray. ÿ Keep protective devices, air vents,

and engine housings as free of dust and dirt as possible.
Wipe them with a clean cloth or blow out dust and dirt with compressed air at low pressure. ÿ Caution: Wear safety goggles when working

with compressed air! ÿ Empty and clean the extraction system.

8.2 Maintenance/Repair Maintenance and repair

work may only be carried out by qualified personnel.

Should the thickness planer malfunction, please contact a specialist dealer or our customer service department. Contact details can be found in the preface.

All protective and safety devices must be reinstalled immediately after repair and maintenance work has been completed.

Machine Translated by Google

8.3 Changing the blade

Warning!

Switch off the device and disconnect it from the mains power supply before performing any maintenance or adjustments.

A blade change is necessary if the machine planes unevenly or tends to chip.

Proceed as follows:

1. **Completely loosen the fastening screws of both lifting handles and remove the lifting handles from the machine.**
2. **Loosen the eight screws of the top cover completely and remove the cover.**

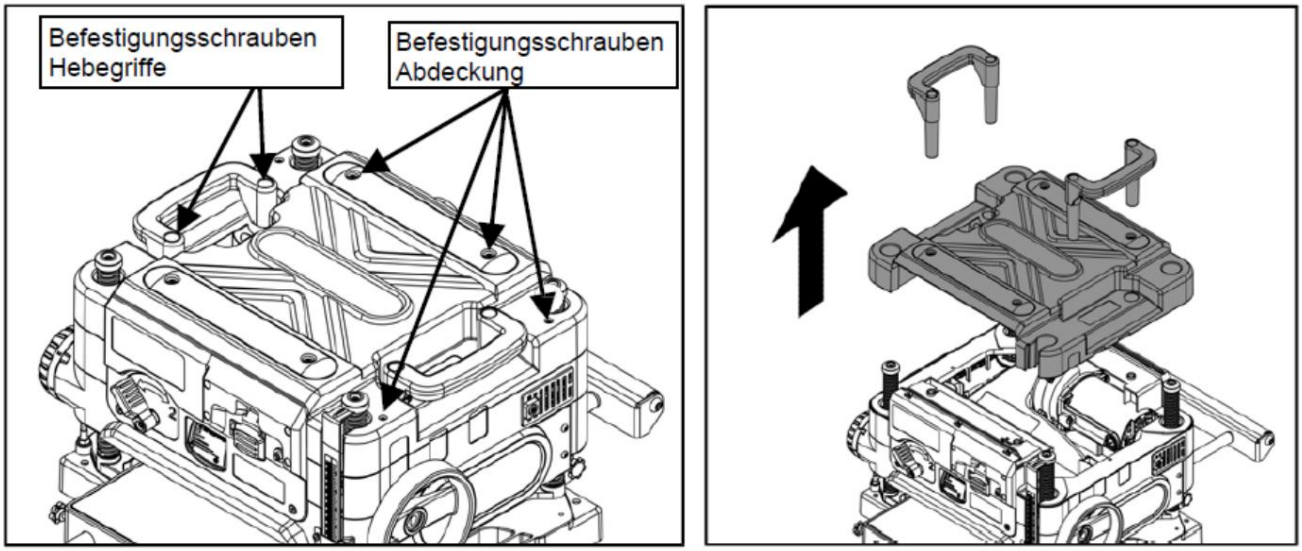

Fig. 8-1: Removing the lifting handles and covering

3. **Remove the mounting screws of the dust cover.**
4. **Turn the dust cover upwards until the round connection on the fan housing is open.**
   Position locks into place.
5. **Push the dust cover to the left to detach it from the fan housing and remove it.**
   then completely off.
6. **Set the dust cover aside.**

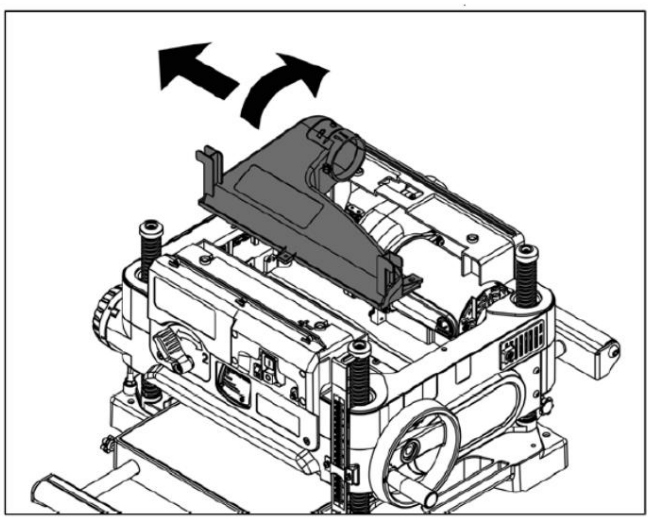

Fig. 8-2: Dust cover

Machine Translated by Google

7. Carefully turn the cutterhead towards you by hand until it engages the self-locking mechanism. is arrested.

8. Loosen and remove the eight screws of the knife clamp. Pull the knife clamp with the

Remove the magnet from the T-wrench and lift it off the cutter head.

9. Use the magnet on the T-wrench to pull out the planer blade. Rotate or replace the blade and reinsert it correctly.

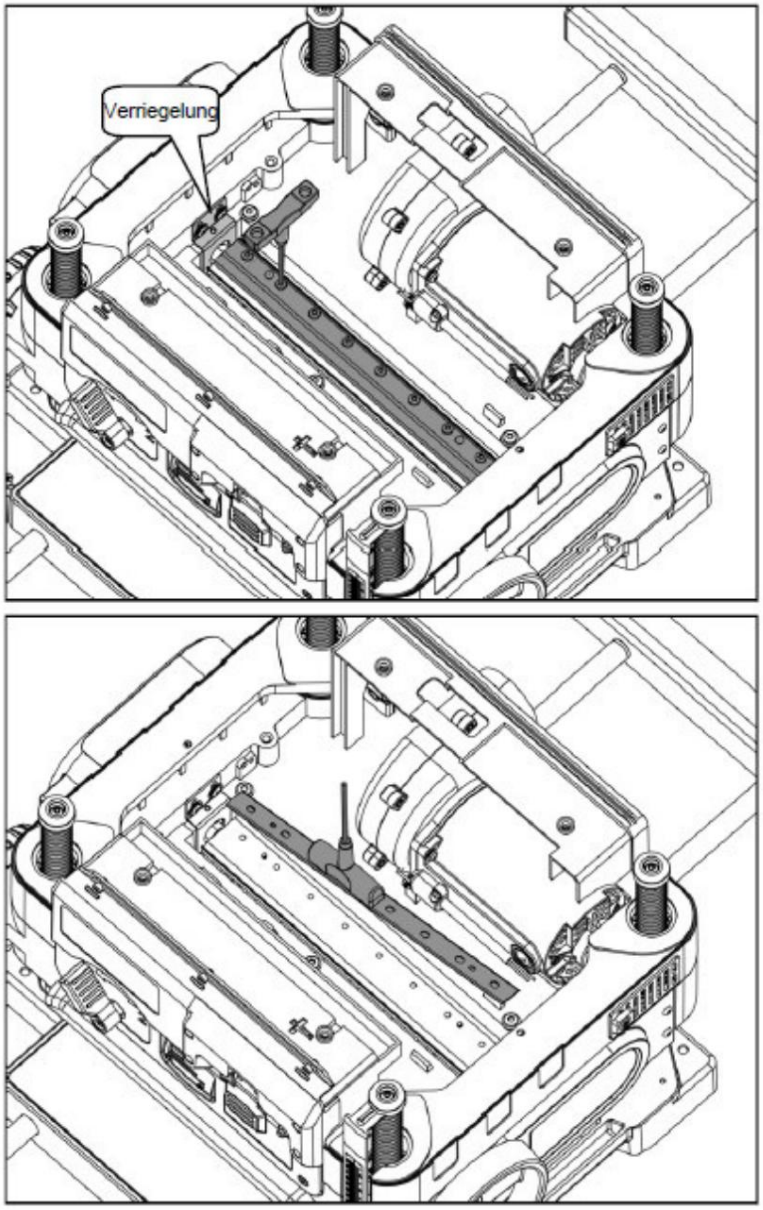

Fig. 8-3: Blade replacement

10. Reinstall the knife clamp and secure it with the eight screws that were removed earlier.

Machine Translated by Google

For spiral cutting head

- Loosen and remove the blade and the fastening screw using a suitable Torx key.

- Turn the knife edge over or replace the knife.

- Reinsert it and carefully secure it with the screw.

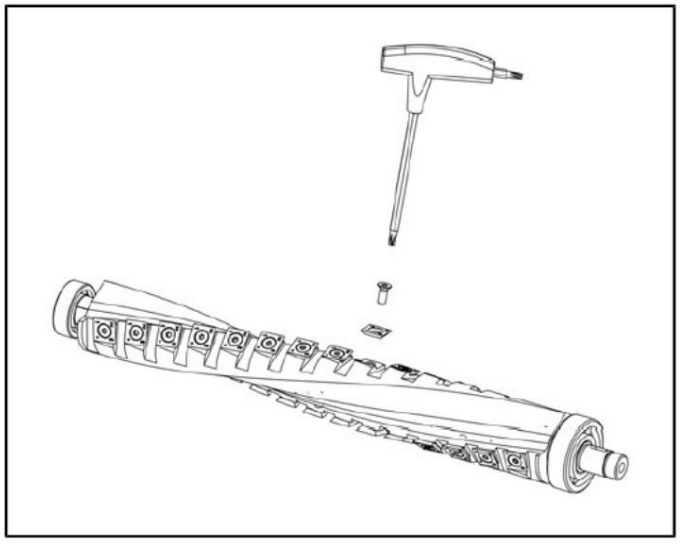

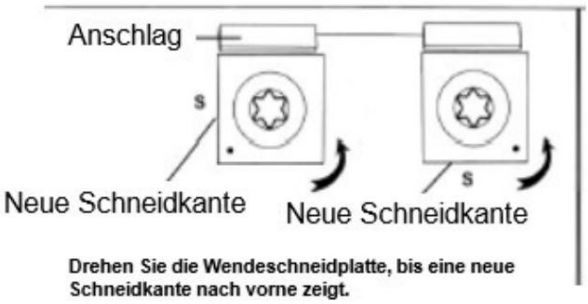

Fig. 8-4: Spiral cutting head

8.4 Brush inspection and replacement

Warning!

Switch off the device and disconnect it from the mains power supply before performing any maintenance or adjustments.

The lifespan of the carbon brushes depends on the motor load. Check the brushes every 50 operating hours. The brushes are located on the side of the motor.

1. Remove the top cover of the device. 2. Open the brush

access cover.

3. Loosen the brush cap and carefully remove the brush.

4. Replace the brush when it is worn out.

5. Insert new brushes and tighten the brush caps again.

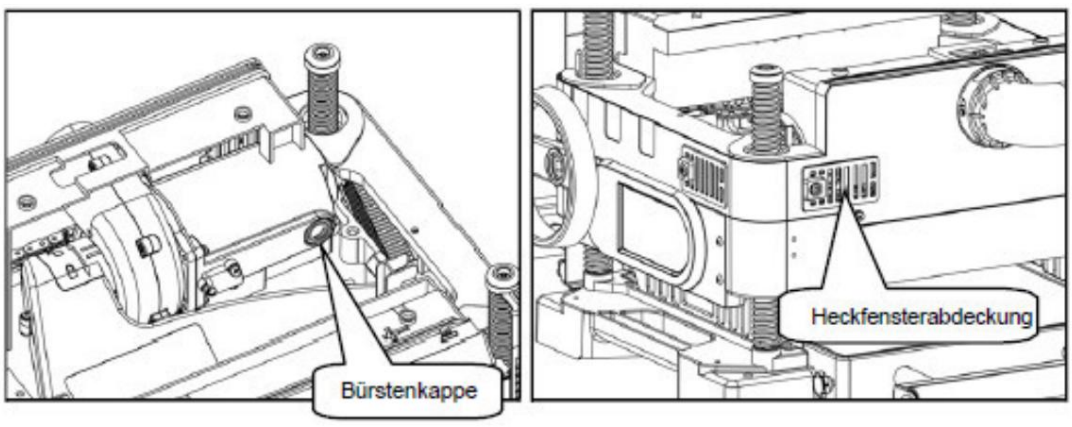

Fig. 8-5: Brush inspection and replacement

Machine Translated by Google

9 Fault table

Disturbance	Caused	remedy
The machine does not start, or the power switch trips immediately after starting.	1. No electricity supply. 2. The power switch has tripped or the fuse has blown. 3. The machine's circuit breaker is triggered. 4. The switch is defective. 5. The circuit breaker is defective. 6. Wiring interrupted. 7. Carbon brush worn out. 8. Engine defective.	1. Check the power supply. 2. Make sure that the Ensure the circuit is free of short circuits. Reset the circuit breaker or replace the fuse. 3. Reset the circuit breaker. 4. Replace the switch. 5. Replace the Circuit breaker. 6. Repair any broken wires. 7. Replace the carbon brushes. 8. Replace the engine.
The machine stops or has insufficient power.	1. The workpiece material is not suitable for the machine. 2. Dull blades. 3. Belt slips, incorrect belt tension or oil/grease on the belt. 4. Motor carbon brushes worn out. 5. Dust extraction problem, which Internal components become clogged with chips. 6. The engine overheats and triggers the [unclear - possibly "common warning light"]. The machine's circuit breaker tripped. 7. Engine defective.	1. Cut wood only, reduce cutting depth and feed rate. 2. Use sharp blades. 3. Clean and tension the belt. 4. Replace the carbon brushes. 5. Remove blockages in the dust channel in the dust guide, reduce cutting depth and feed rate. 6. Clean/cool the engine and reduce the load. 7. Replace the engine.
The machine vibrates or is unusually loud.	1. Motor or component loose. 2. Blades or blade holders. 3. Dust/shavings clog the passageway. 4. Gearbox defective. 5. The pulley is loose.	1. Loose screws/nuts check and tighten. Replace damaged components. 2. Check and replace blades or blade holders. 3. Remove dust/chips, reduce cutting depth. 4. Repair or replace the gearbox. 5. Attach the pulley to the shaft.
The workpiece stops/slows down in the middle of the cut.	1. Cutting depth too great. 2. There is glue on the work table. 3. The workpiece is too large and too heavy.	1. Reduce cutting depth. 2. Clean the work surface. 3. Reduce the cutting depth.
Long lines or ridges that run along the length of the workpiece material.	1. Blade is nicked or chipped.	1. Replace the blades.

Machine Translated by Google

10 spare parts

Risk of injury from using incorrect spare parts!

Using incorrect or faulty spare parts can create hazards for the operator and cause damage and malfunctions.



Stürmer Maschinen GmbH accepts no liability or warranty for damage or malfunctions resulting from failure to observe these operating instructions. For repairs, use only flawless and suitable tools, original spare parts, or series parts expressly approved by Stürmer Maschinen GmbH.

The manufacturer's warranty is void if unauthorized replacement parts are used.

Information about technical customer service

Repairs covered by the warranty may only be carried out by service technicians authorized by us.

10.1 Ordering spare parts Spare parts

can be obtained through the specialist dealer.

Send a copy of the spare parts drawing with the marked components to the specialist dealer and specify the following:

Article number

ÿ Model name ÿ Date of manufacture ÿ Item numbers of the components and, if applicable, the corresponding spare parts drawing number ÿ Quantity ÿ Desired shipping method (post, freight, sea, air, express) ÿ Shipping address

Spare parts orders without the above information cannot be processed. If no shipping method is specified, shipping will be at the supplier's discretion.

Information on the model type, article number and year of manufacture can be found on the type plate attached to the thickness planer.

Example

The carbon brush for the DH 330-2 thickness planer must be ordered.

The carbon brush is number 185 in the spare parts drawing 2.

When ordering spare parts, send a copy of the spare parts drawing (2) with the component (carbon brush) and position number (185) marked to the authorized dealer and provide the following information:

Article number	**5904335**
ÿ Model designation ÿ	**DH 330-2**
Drawing number ÿ Position number	**2** **185**

Machine Translated by Google

10.2 Spare parts drawings Spare parts drawing 1 - DH 330-2

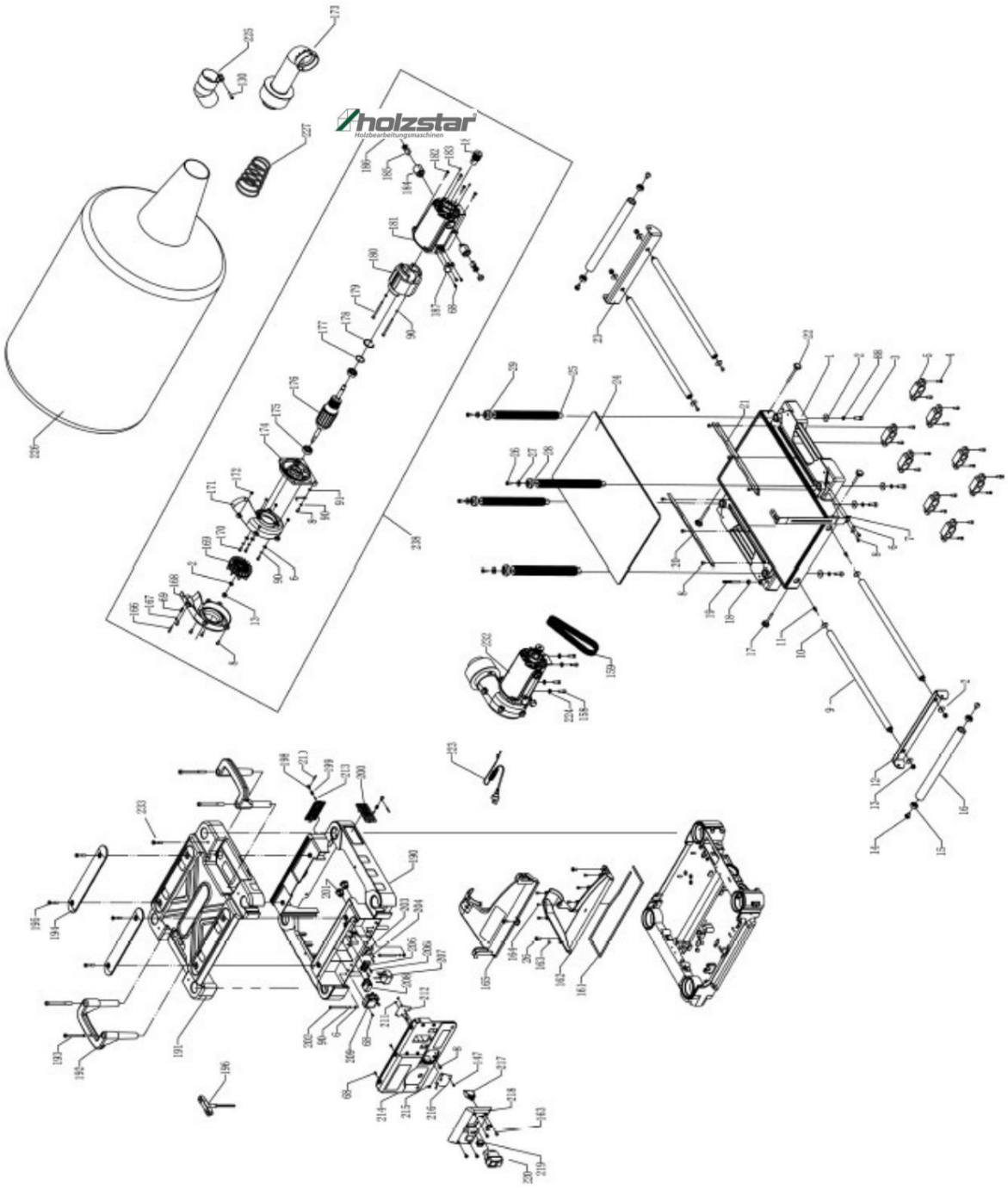

Fig. 10-1: Spare parts drawing 1 - DH 330-2

Machine Translated by Google

Spare parts drawing 2 - DH 330-2

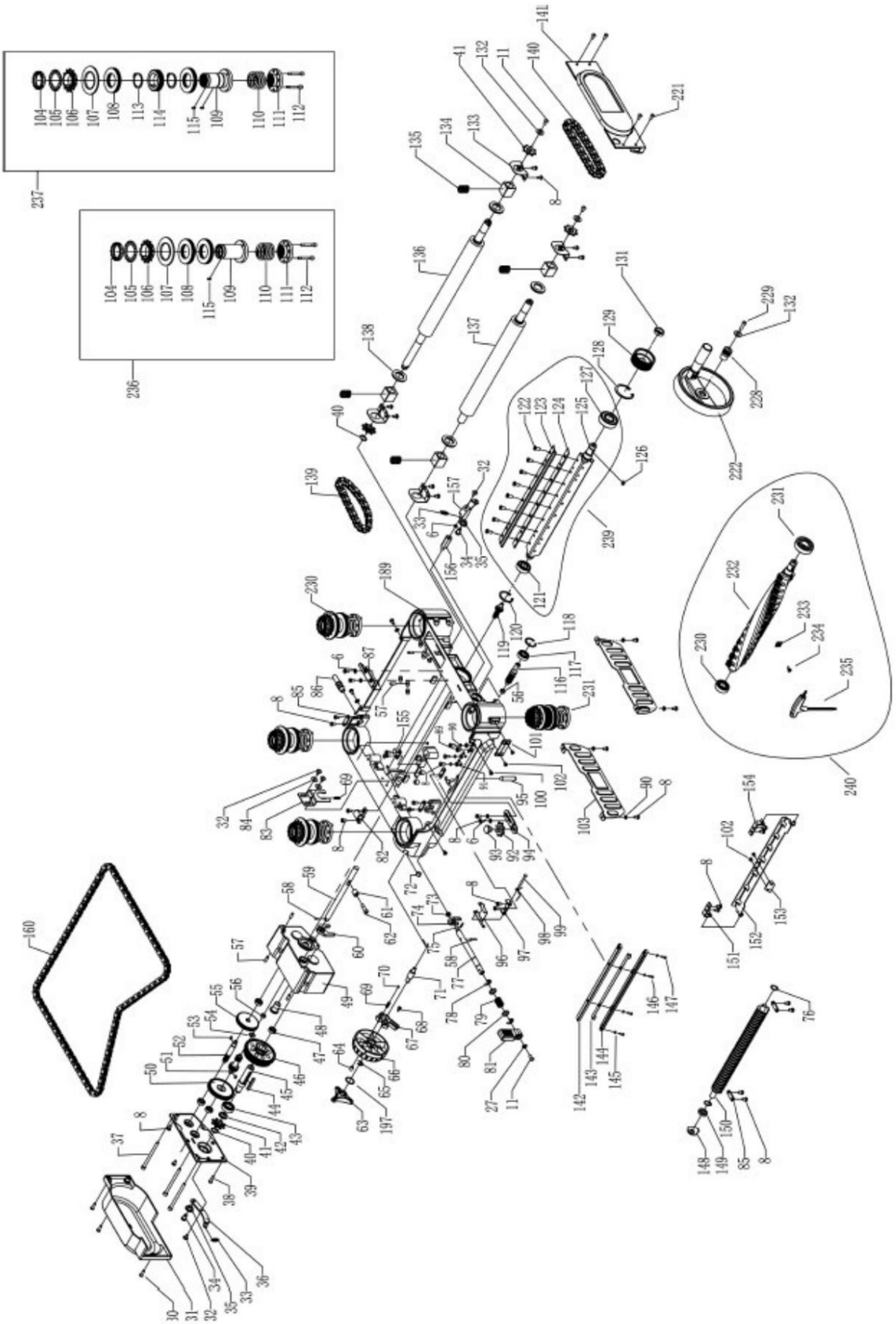

Fig. 10-2: Spare parts drawing 2 - DH 330-2

Machine Translated by Google

Spare parts drawing 3 - DH 330-2 Spiral

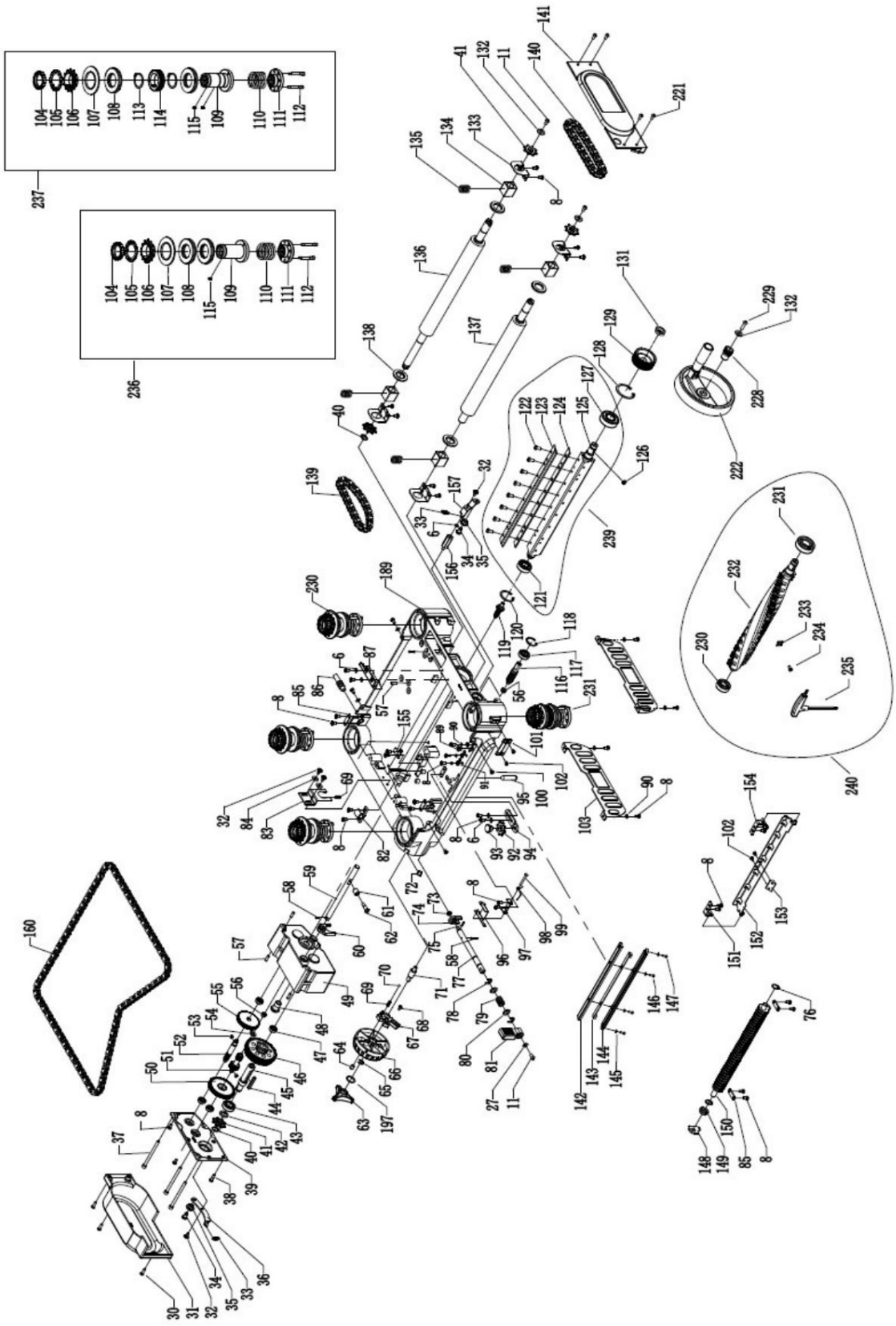

Fig. 10-3: Spare parts drawing 3 - DH 330-2 Spiral

Machine Translated by Google

Spare parts drawing 4 - DH 330-2 Spiral

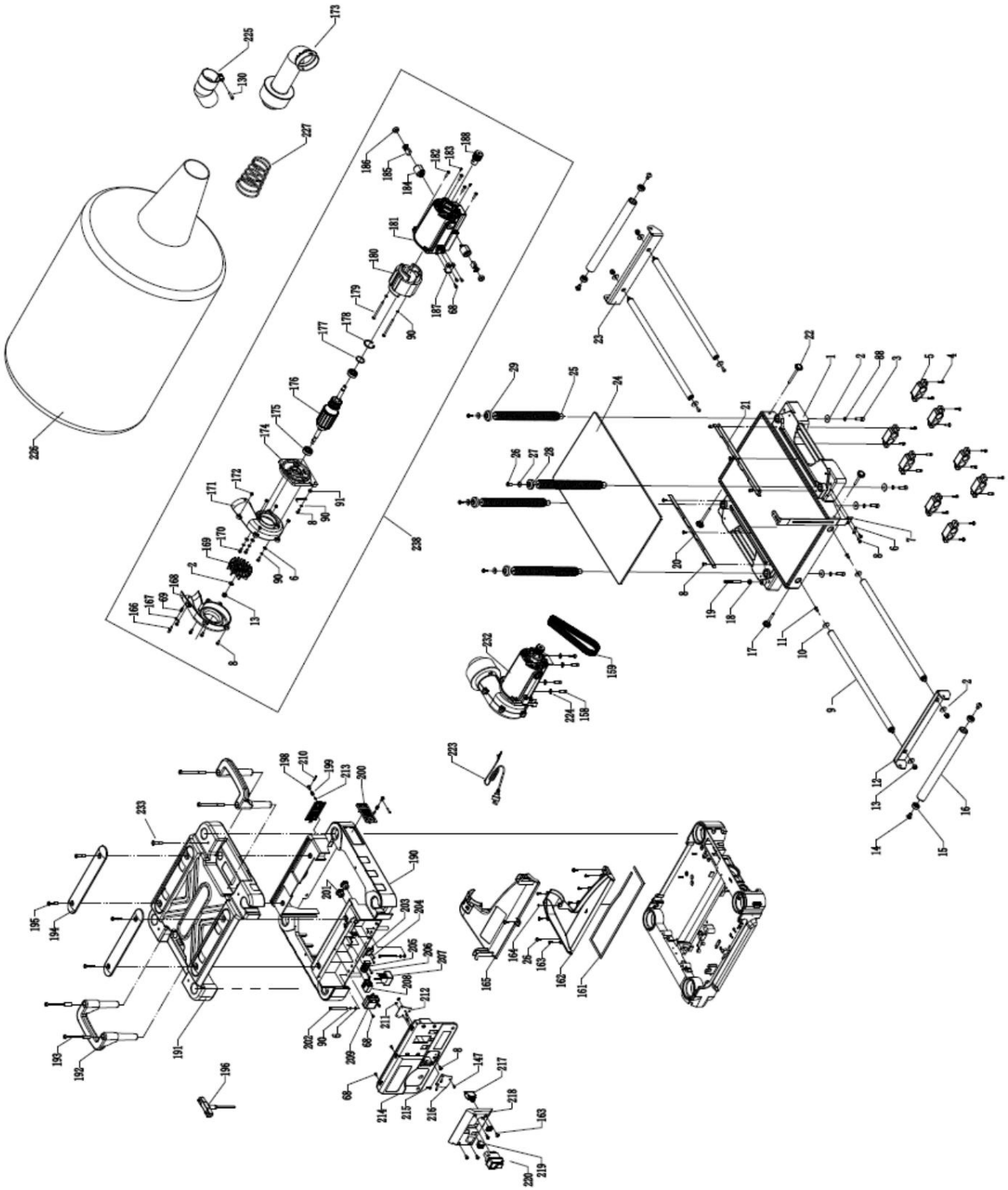

Fig. 10-4: Spare parts drawing 4 - DH 330-2 Spiral

Machine Translated by Google

11 circuit diagrams

11.1 Circuit diagram DH 330-2

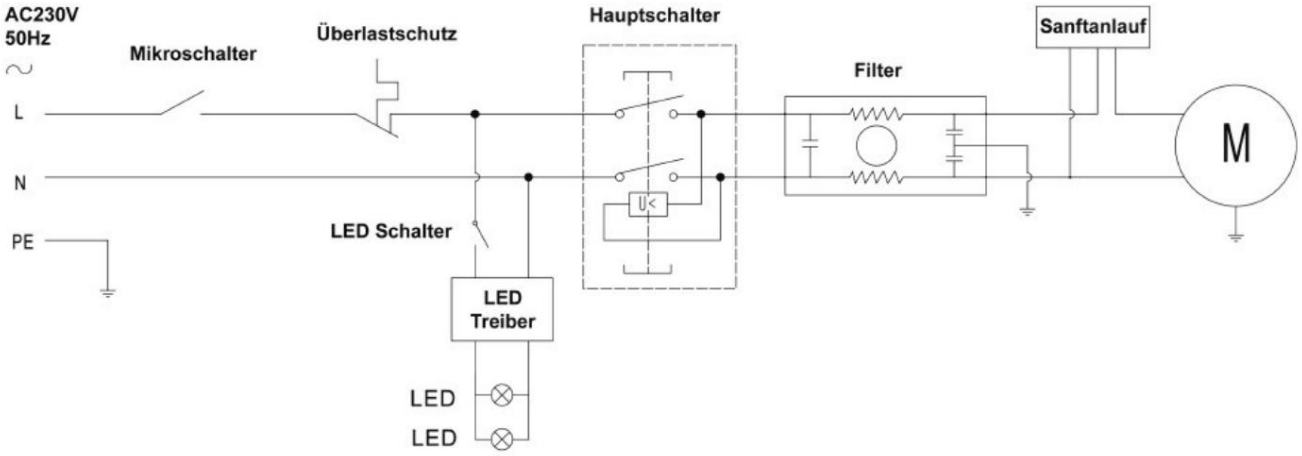

Fig. 11-1: DH 330-2

Machine Translated by Google

12 EU Declaration of Conformity

According to Machinery Directive 2006/42/EC Annex II 1.A

Manufacturer / Distributor:	**Stürmer Maschinen GmbH** **Dr.-Robert-Pfleger-Str. 26** **D-96103 Hallstadt**	
Product group:	**Woodworking machines**	
Type designation:	**thickness planer**	**Article number**
Product name: *	☐ **DH 330-2**	**5904335**
	☐ **DH 330-2 Spiral**	**5904336**
Serial number: *	_____	
* **Year of construction:**	**20_____**	

*** Fill in these fields using the information on the type plate.**

complies with all relevant provisions of the above-mentioned directive and the other applicable standards – including any amendments to them applicable at the time of the declaration.

Relevant EU directives:	**2014/30/EU EMC Directive** **2011/65/EU RoHS Directive** **2015/863/EU RoHS Supplement** **2017/2102/EU RoHS Amendment**

The following harmonized standards were applied:

EN IEC 55014-1:2021	**Electromagnetic compatibility - requirements for household appliances, Power tools and similar electrical equipment - Part 1: Interference emission (CISPR 14-1:2020)**
EN IEC 55014-2:2021	**Electromagnetic compatibility - requirements for household appliances, Power tools and similar electrical equipment - Part 2: Immunity to interference - Product family standard (CISPR 14-2:2020)**
EN 62841-1:2015 + AC:2015 + A11:2022	**Electric motor-driven handheld tools, portable Tools and lawn and garden machinery - Safety - Part 1: General requirements**
EN 61029-2-3:2011	**Safety of portable motor-driven power tools - Part 2-3: Special requirements for surface planers and thickness planers**
EN IEC 61000-3-2:2019 + A1:2021	**Electromagnetic compatibility (EMC) - Part 3-2: Limit values - Limit values for harmonic currents (device input current ÿ 16 A each) conductor) (IEC 61000-3-2:2018 + A1:2020 + ISH1:2021)**
EN 61000-3-3:2013 + A1:2019 + A2:2021 + A2:2021/AC:2022	**Electromagnetic compatibility (EMC) - Part 3-3: Limit values - Limitation of voltage changes, voltage fluctuations and Flicker in public low-voltage supply networks for devices with a rated current ÿ 16 A per conductor that are not Special connection conditions apply (IEC 61000-3-3:2013 + A1:2017 + A2:2021 + A2:2021/COR1:2022)**

Name and address of the person authorized to compile the technical documentation:

Kilian Stürmer, Stürmer Maschinen GmbH, Dr.-Robert-Pfleger-Str. 26, D-96103 Hallstadt

Kilian Stürmer (Managing Director)

Hallstadt, January 7, 2026

Machine Translated by Google

13 Appendix

13.1 Copyright

**The contents of this manual are copyrighted and the sole property of Stürmer.
Maschinen GmbH. Their use is permitted within the context of using the thickness planer.
Any use beyond this is not permitted without the manufacturer's written consent.
Distribution, reproduction, use, and disclosure of this document and its contents are prohibited.
unless expressly permitted.**

Violations will result in liability for damages.

**We register trademark, patent and design rights to protect our products, if necessary in individual cases.
is possible.**

We strongly oppose any infringement of our intellectual property.

Technical specifications are subject to change without notice.

13.2 Limitation of Liability

**All information and instructions in the operating manual were prepared in accordance with applicable standards and
Regulations, the state of the art, and our many years of knowledge and experience
compiled.**

**Stürmer Maschinen GmbH accepts no liability for damages in the following cases: ÿ Failure
to observe the operating instructions, ÿ
Use of equipment not in accordance with
its intended purpose, ÿ Use of unqualified and
incompetent personnel, ÿ
Unauthorized modifications, ÿ
Technical alterations, ÿ Use of unauthorized spare parts.**

**The actual scope of delivery may vary for special versions or when using additional services.
Ordering options or due to the latest technical changes from the explanations described here may change.
and representations may differ.**

**The obligations agreed upon in the delivery contract, the general terms and conditions, and the
The manufacturer's terms of delivery and the legal regulations valid at the time of conclusion of the contract.
Regulations.**

13.3 Storage

DANGER!

**If components of the thickness planer are stored incorrectly or improperly, they can be damaged.
They may be damaged or destroyed. Store the packaged or already unpacked parts.
only under the intended environmental conditions.**

**Consult your specialist dealer if the machine and accessories will be in use for more than three months and under
must be stored under environmental conditions other than those prescribed.**

13.4 Disposal information / Recycling options:

**Please do not simply throw the packaging and later the used product into the environment, but
Dispose of both properly in accordance with the regulations of your city/municipal administration or the responsible authority
Guidelines established by waste disposal companies.**

Machine Translated by Google

13.4.1 Take out of service

CAUTION!



Disused equipment must be professionally decommissioned immediately to prevent future misuse and endangerment of the environment or people. Dispose of all environmentally hazardous operating fluids from the old equipment. If necessary, disassemble the machine into manageable and recyclable assemblies and components. Dispose **of the machine components and operating fluids according to the designated disposal procedures.**

13.4.2 Disposal of electrical appliances

Electrical devices contain a variety of recyclable materials as well as environmentally harmful components.

These components must be disposed of separately and properly. If in doubt, contact your local waste disposal service.

For processing, it may be necessary to seek the assistance of a specialized waste disposal company.

13.4.3 Disposal of lubricants

The lubricant manufacturer provides the disposal instructions for the lubricants used.
If necessary, ask for the product-specific data sheets.

13.5 Disposal via municipal collection points Disposal of used electrical and

electronic equipment (Applicable in the countries of the European Union and other European countries with a separate collection system for this equipment).



The symbol on the product or its packaging indicates that this product should not be treated as normal household waste, but must be handed in at a collection point for the recycling of electrical and electronic equipment.

By disposing of this product correctly, you protect the environment and the health of your fellow human beings. Improper disposal endangers the environment and health.
Material recycling helps reduce the consumption of raw materials. For more information about recycling this product, contact your local council, municipal waste management company, or the store where you purchased it.

14 Product observation

We are obligated to monitor our products even after delivery.

Please tell us anything that is of interest to us:

ÿ Changed settings data.

• Experiences with the thickness planer that are important for other users. • Recurring malfunctions.

Stürmer Maschinen GmbH Dr.-

Robert-Pfleger-Str. 26 D-96103
Hallstadt

Fax: (+49)0951 96555-55 Email:

info@holzstar.de

Machine Translated by Google

15 notes

Machine Translated by Google

holzstar
Holzbearbeitungsmaschinen









stürmer
WELT DER MASCHINEN

Stürmer Maschinen GmbH
Dr.-Robert-Pfleger-Straße 26
D-96103 Hallstadt
+49 951 96 555 - 0
info@stuermer-maschinen.de
www.stuermer-maschinen.de











